THE RESIDENCES AT SPOT POND

5 WOODLAND ROAD

MAP 27 LOTS 3 & 3CM
STONEHAM, MA

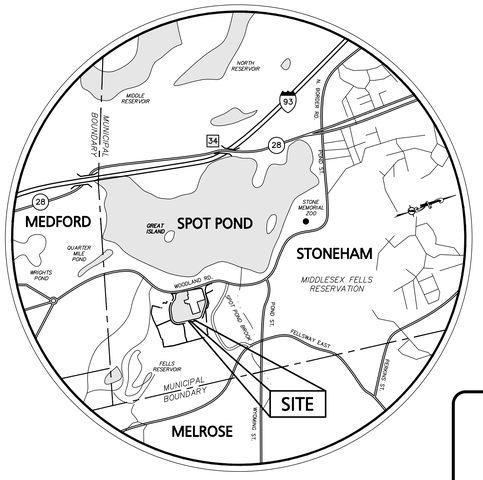

LOCUS MAP
NOT TO SCALE

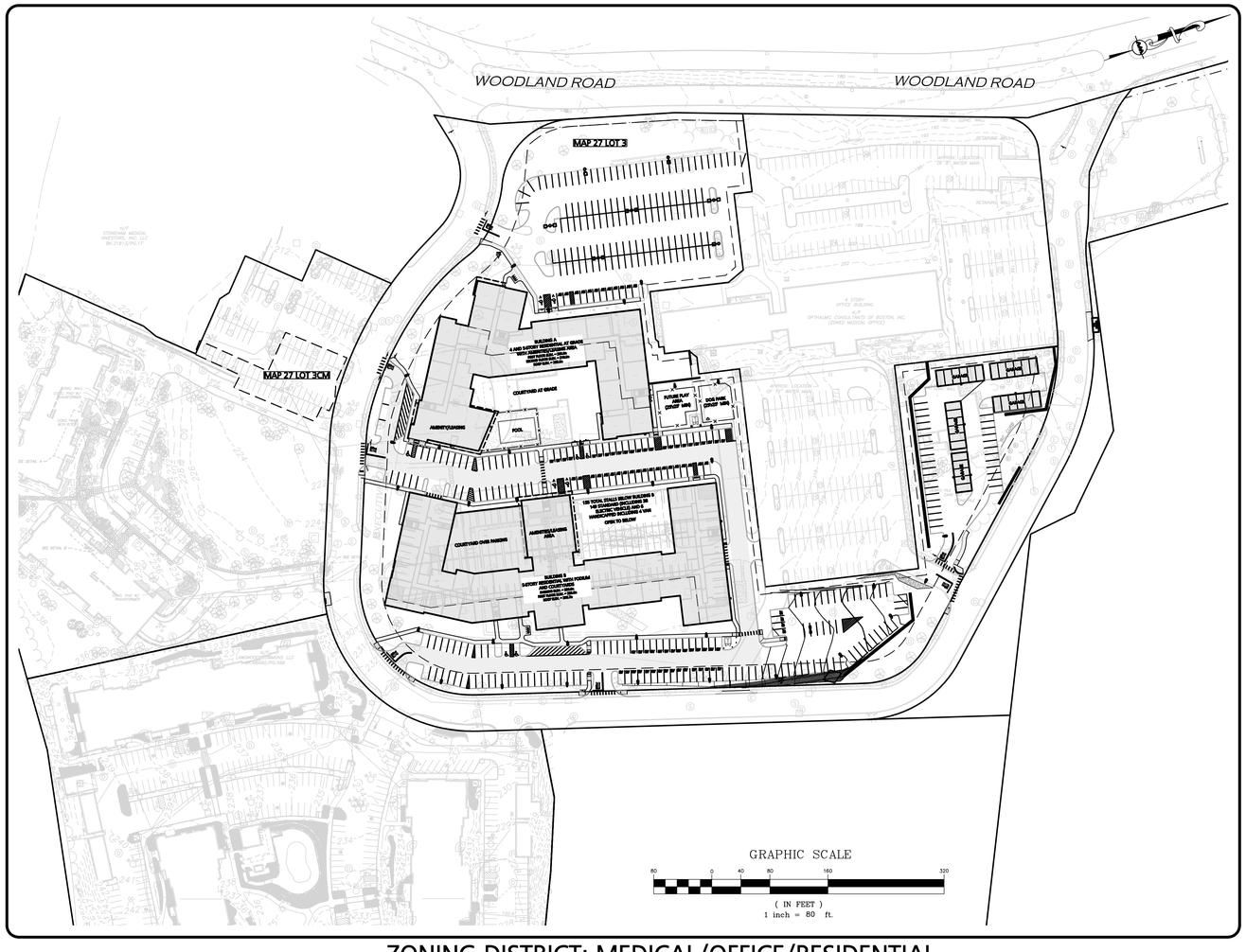

ZONING DISTRICT: MEDICAL/OFFICE/RESIDENTIAL

OWNER / APPLICANT:
FELLSWAY DEVELOPMENT, LLC
C/O THE GUTIERREZ COMPANY
200 SUMMIT DRIVE, SUITE 400
BURLINGTON, MA 01803
781.272.7000

SITE ENGINEER, LAND SURVEYOR & LANDSCAPE ARCHITECT:
ALLEN & MAJOR ASSOCIATES, INC.
100 COMMERCE WAY, SUITE 5
WOBURN, MA 01801
781.935.6889

LIST OF DRAWINGS

CIVIL, SURVEY AND LANDSCAPE PLANS

DRAWING TITLE	SHEET NO.	ISSUED	REVISED THRU
COVER SHEET	--------	11/16/2023	04/30/2024
EXISTING CONDITIONS	V-100	9/8/2023	04/25/2024
ABBREVIATIONS & NOTES	C-001	11/16/2023	04/30/2024
EROSION CONTROL PLAN	C-101	11/16/2023	04/30/2024
SITE PREPARATION & DEMOLITION PLAN	C-102	11/16/2023	04/30/2024
LAYOUT & MATERIALS PLAN	C-103	11/16/2023	04/30/2024
GRADING & SPOT GRADES PLAN	C-104	11/16/2023	04/30/2024
DRAINAGE PLAN	C-105A	11/16/2023	04/30/2024
DRAINAGE PLAN	C-105B	11/16/2023	04/30/2024
UTILITY PLAN	C-106	11/16/2023	04/30/2024
PHOTOMETRICS PLAN	C-107	11/16/2023	04/30/2024
FIRE TRUCK TURNING PLAN	C-108	11/16/2023	04/30/2024
REFUSE TRUCK TURNING PLAN	C-109	11/16/2023	04/30/2024
DETAILS	D-501	11/16/2023	04/30/2024
DETAILS	D-502	11/16/2023	04/30/2024
DETAILS	D-503	11/16/2023	04/30/2024
DETAILS	D-504	11/16/2023	04/30/2024
LANDSCAPE PLAN	L-101	11/16/2023	04/30/2024
LANDSCAPE NOTES AND DETAILS	L-501	11/16/2023	04/30/2024
LANDSCAPE NOTES AND DETAILS	L-502	11/16/2023	04/30/2024

COMMONWEALTH OF MASSACHUSETTS
4.30.24
CARLTON M. QUINN
CIVIL
No.49923
REGISTERED PROFESSIONAL ENGINEER

PROFESSIONAL ENGINEER FOR
ALLEN & MAJOR ASSOCIATES, INC.

PREPARED BY:

ALLEN & MAJOR ASSOCIATES, INC.
civil engineering ◆ land surveying
environmental consulting ◆ landscape architecture
www.allenmajor.com
100 COMMERCE WAY, SUITE 5
WOBURN MA 01801
TEL: (781) 935-6889
FAX: (781) 935-2896
WOBURN, MA ◆ LAKEVILLE, MA ◆ MANCHESTER, NH

DIG SAFE
BEFORE YOU DIG
CALL 811 OR
1-888-DIG-SAFE
1-888-344-7233

ISSUED FOR STORMWATER PERMIT: SEPTEMBER 8, 2023
ISSUED FOR COMPREHENSIVE PERMIT: NOVEMEBER 16, 2023

REVISED PER PEER REVIEW COMMENTS: APRIL 30, 2024

N:\PROJECTS\1145-01T\CIVIL\DRAWINGS\CURRENT\C-1145-01T - COVER - PERMITTING.DWG

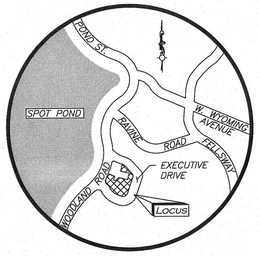

LOCUS MAP

(NOT TO SCALE)

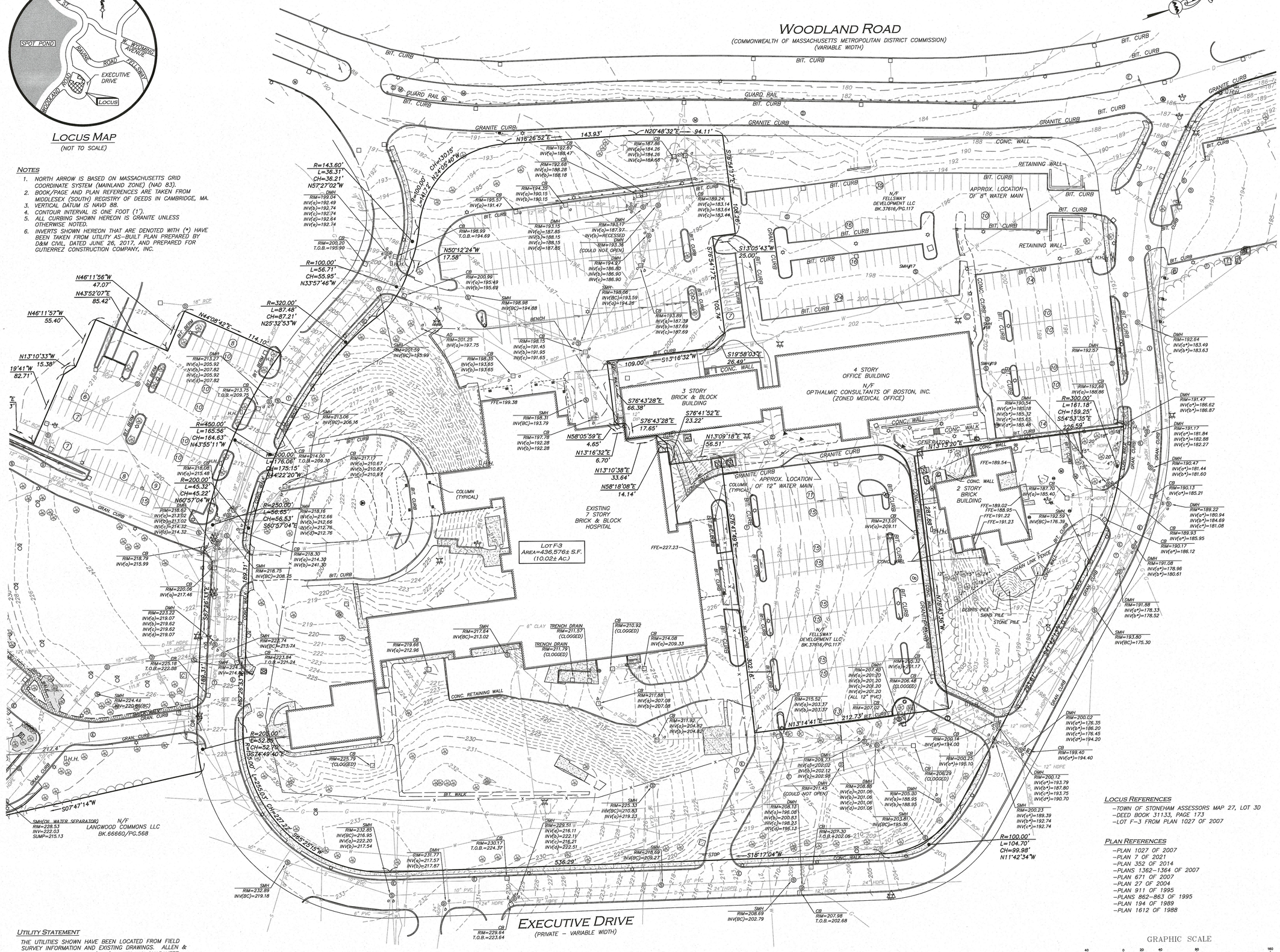

NOTES

1. NORTH ARROW IS BASED ON MASSACHUSETTS GRID COORDINATE SYSTEM (MAINLAND ZONE) (NAD 83).
2. BOOK/PAGE AND PLAN REFERENCES ARE TAKEN FROM MIDDLESEX (SOUTH) REGISTRY OF DEEDS IN CAMBRIDGE, MA.
3. VERTICAL DATUM IS NAVD 88.
4. CONTOUR INTERVAL IS ONE FOOT (1').
5. ALL CURBING SHOWN HEREON IS GRANITE UNLESS OTHERWISE NOTED.
6. INVERTS SHOWN HEREON THAT ARE DENOTED WITH (*) HAVE BEEN TAKEN FROM UTILITY AS-BUILT PLAN PREPARED BY D&M CIVIL, DATED JUNE 26, 2017, AND PREPARED FOR GUTIERREZ CONSTRUCTION COMPANY, INC.

UTILITY STATEMENT

THE UTILITIES SHOWN HAVE BEEN LOCATED FROM FIELD SURVEY INFORMATION AND EXISTING DRAWINGS. ALLEN & MAJOR ASSOCIATES, INC. (A&M) MAKES NO GUARANTEE THAT THE UTILITIES SHOWN HEREON COMPRISE ALL SUCH UTILITIES IN THE AREA, EITHER IN SERVICE OR ABANDONED. A&M FURTHER DOES NOT WARRANT THAT THE UTILITIES SHOWN ARE IN THE EXACT LOCATION INDICATED. A&M HAS NOT PHYSICALLY LOCATED THE UNDERGROUND UTILITIES.

LOCUS REFERENCES

–TOWN OF STONEHAM ASSESSORS MAP 27, LOT 3D
–DEED BOOK 31133, PAGE 173
–LOT F-3 FROM PLAN 1027 OF 2007

PLAN REFERENCES

–PLAN 1027 OF 2007
–PLAN 7 OF 2021
–PLAN 352 OF 2014
–PLANS 1362–1364 OF 2007
–PLAN 671 OF 2007
–PLAN 27 OF 2004
–PLAN 911 OF 1995
–PLANS 862–863 OF 1995
–PLAN 194 OF 1989
–PLAN 1612 OF 1988

GRAPHIC SCALE

40 0 20 40 80 160

(IN FEET)
1 inch = 40 ft.

N:\PROJECTS\1145-01T\SURVEY\DRAWINGS\CURRENT\S-1145-01T-EC-UPDATE-2024.DWG

WE HEREBY CERTIFY THAT:

THIS PLAN IS THE RESULT OF AN ACTUAL ON THE GROUND SURVEY PERFORMED ON OR BETWEEN JANUARY 13, 2016 AND APRIL 24, 2024.
OWNERS OF ADJOINING PROPERTIES ARE SHOWN ACCORDING TO CURRENT TOWN OF STONEHAM ASSESSOR'S INFORMATION.
THE ABOVE IS CERTIFIED TO THE BEST OF MY PROFESSIONAL KNOWLEDGE, INFORMATION AND BELIEF.

ALLEN & MAJOR ASSOCIATES, INC.

PROFESSIONAL LAND SURVEYOR FOR ALLEN & MAJOR ASSOCIATES, INC.

April 25, 2024

COMMONWEALTH OF MASSACHUSETTS NORMAN J. UPSITIS No. 39498 PROFESSIONAL LAND SURVEYOR

4/25/24

LEGEND

DRAIN MANHOLE (DMH)	D
SEWER MANHOLE (SMH)	S
ELECTRIC MANHOLE (EMH)	E
MISC. MANHOLE (MH)	M
TELEPHONE MANHOLE (TMH)	T
WATER MANHOLE (WMH)	W
CABLE MANHOLE (CMH)	C
FIRE HYDRANT	
CATCH BASIN (CB)	
WATER GATE	W
SIGN	
GAS GATE	G
LIGHT	
TREE	
AREA DRAIN	
UTILITY POLE W/RISER	
AIR CONDITIONER	AC
TRANSFORMER	
HAND HOLE	H.H.
COLUMN	
HANDICAPPED PARKING SPACE	
CONCRETE	
LANDSCAPED AREA (LSA)	
BUILDING	
BUILDING OVERHANG	
1' CONTOUR	203
5' CONTOUR	205
PROPERTY LINE	
CONCRETE WALL	
TREE LINE	
EDGE OF PAVEMENT	
EDGE OF GRAVEL	
CURB	
GUARDRAIL	
SEWER LINE	S
DRAIN LINE	D
WATER LINE	W
GAS LINE	G
ELECTRIC LINE	E
TELEPHONE LINE	T
BITUMINOUS	BIT.
CONCRETE	CONC.
GRANITE	GRAN.
BOTTOM CENTER	(BC)
REINFORCED CONCRETE PIPE	RCP
POLYVINYL CHLORIDE PIPE	PVC
DUCTILE IRON PIPE	DIP
HIGH DENSITY POLYETHYLENE PIPE	HDPE
FOUND	FND
NOW OR FORMERLY	N/F
BOOK	BK.
PAGE	PG.

REV	DATE	DESCRIPTION

APPLICANT\OWNER:
FELLSWAY DEVELOPMENT LLC
c/o THE GUTIERREZ COMPANY
200 SUMMIT DIRVE, SUITE 400
BURLINGTON, MA 01803

PROJECT:
THE RESIDENCES AT SPOT POND
MULTI-TAMILY HOUSING
5 WOODLAND ROAD
STONEHAM, MA 02180

PROJECT NO.	1145-01T	DATE:	04/25/2024
SCALE:	1" = 40'	DWG. NAME:	S-1145-01T-EC
DRAFTED BY:	COB/JS	CHECKED BY:	NL

PREPARED BY:

ALLEN & MAJOR ASSOCIATES, INC.
civil engineering ◆ land surveying
environmental consulting ◆ landscape architecture
www.allenmajor.com
100 COMMERCE WAY
WOBURN MA 01801-8501
TEL: (781) 935-6889
FAX: (781) 935-2896
WOBURN, MA ◆ LAKEVILLE, MA ◆ MANCHESTER, NH

THIS DRAWING HAS BEEN PREPARED IN DIGITAL FORMAT. CLIENT/CLIENT'S REPRESENTATIVE OR CONSULTANTS MAY BE PROVIDED COPIES OF DRAWINGS AND SPECIFICATIONS FOR HIS/HER INFORMATION AND/OR SPECIFIC USE ON THIS PROJECT. DUE TO THE POTENTIAL THAT THE PROVIDED INFORMATION MAY BE MODIFIED UNINTENTIONALLY OR OTHERWISE, ALLEN & MAJOR ASSOCIATES, INC. MAY REMOVE ALL INDICATION OF THE DOCUMENT'S AUTHORSHIP ON THE DIGITAL MEDIA. PRINTED REPRESENTATIONS OR PORTABLE DOCUMENT FORMAT OF THE DRAWINGS AND SPECIFICATIONS ISSUED SHALL BE THE ONLY RECORD COPIES OF ALLEN & MAJOR ASSOCIATES, INC.'S WORK PRODUCT.

DRAWING TITLE:	SHEET No.
EXISTING CONDITIONS	V-101

Copyright©2024 Allen & Major Associates, Inc.
All Rights Reserved

NOTES

GENERAL NOTES:

1. TOPOGRAPHIC INFORMATION AND EXISTING SITE FEATURES WERE OBTAINED FROM AN ACTUAL FIELD SURVEY PERFORMED BY ALLEN & MAJOR ASSOCIATES, INC, 100 COMMERCE WAY, WOBURN, MASSACHUSETTS. PLAN ENTITLED "EXISTING CONDITIONS – V–101" PREPARED BY ALLEN & MAJOR ASSOCIATES, DATED SEPTEMBER 8, 2023, AND REVISED THROUGH APRIL 25, 2024, ORIGINAL SCALE 1"=40'.
2. ZONING DISTRICT IS MEDICAL/OFFICE/RESIDENTIAL
3. OVERALL LOT SIZE: MAP 27 LOT 3 = 10.02± ACRES
   MAP 3 LOT 6CM = 5.33± ACRES
4. DURING CONSTRUCTION, ALL VEHICLES MUST BE PARKED ON SITE.
5. DURING CONSTRUCTION, ALL STAGING AND DELIVERIES WILL OCCUR ON SITE.
6. THIS PROJECT WILL BE SERVED BY PUBLIC WATER AND SEWER AND PRIVATE, NATURAL GAS, TELEPHONE, CABLE AND ELECTRIC. ALL UTILITY LINES WILL BE INSTALLED UNDERGROUND UNLESS OTHERWISE NOTED.
7. THE CONTRACTOR IS SPECIFICALLY CAUTIONED THAT THE LOCATION AND/OR ELEVATION OF EXISTING UTILITIES AND STRUCTURES AS SHOWN ON THESE PLANS IS BASED ON RECORDS OF VARIOUS UTILITY COMPANIES AND WHERE POSSIBLE, MEASUREMENTS TAKEN IN THE FIELD. THIS INFORMATION IS NOT TO BE RELIED ON AS BEING EXACT OR COMPLETE. THE LOCATION OF ALL UNDERGROUND UTILITIES AND STRUCTURES SHALL BE VERIFIED IN THE FIELD BY THE CONTRACTOR PRIOR TO THE START OF CONSTRUCTION. THE CONTRACTOR MUST CONTACT THE APPROPRIATE UTILITY COMPANY, ANY GOVERNING PERMITTING AUTHORITY, AND "DIGSAFE" AT LEAST 72 HOURS PRIOR TO ANY EXCAVATION WORK TO REQUEST EXACT FIELD LOCATION OF UTILITIES AND THE ENGINEER SHALL BE NOTIFIED IN WRITING OF ANY UTILITIES INTERFERING WITH THE PROPOSED CONSTRUCTION AND APPROPRIATE REMEDIAL ACTION TAKEN BEFORE PROCEEDING WITH THE WORK. IT SHALL BE THE RESPONSIBILITY OF THE CONTRACTOR TO RELOCATE ALL EXISTING UTILITIES WHICH CONFLICT WITH THE PROPOSED IMPROVEMENTS SHOWN ON THE PLANS AT NO ADDITIONAL COST.
8. ALL PROPOSED MAIN BUILDING ENTRANCES AND WALKS SHALL BE HANDICAP ACCESSIBLE PER FEDERAL ADA & MA AAB REGULATIONS.
9. ALL SITE WORK DONE FOR THIS PROJECT SHALL BE IN STRICT ACCORDANCE WITH THE SITE PLANS AND SITE WORK SPECIFICATIONS FOR CONSTRUCTION.
10. ANY DAMAGE TO PRIVATE OR PUBLIC PROPERTIES DUE TO THE CONTRACTOR'S ACTIVITIES SHALL BE REPAIRED AND RESTORED BY THE CONTRACTOR AT THEIR OWN EXPENSE.
11. ALL PROPERTY MARKERS AND STREET LINE MONUMENTS SHALL BE PROPERLY PROTECTED DURING CONSTRUCTION. ANY DAMAGE TO THESE ITEMS SHALL BE REPAIRED AND RESTORED BY A SURVEYOR REGISTERED IN THE STATE OF MASSACHUSETTS AT THE CONTRACTOR'S EXPENSE.
12. ALL APPLICABLE PERMITS AND AN APPROVED SET OF PLANS SHALL BE AVAILABLE AT THE CONSTRUCTION SITE.
13. THE CONTRACTOR IS RESPONSIBLE FOR SCHEDULING A PRE–CONSTRUCTION MEETING THE WITH THE APPROPRIATE CITY DEPARTMENTS, THE APPROPRIATE UTILITY COMPANIES, THE OWNER AND OWNER'S REPRESENTATIVE. THE MEETING SHALL TAKE PLACE PRIOR TO THE START OF CONSTRUCTION AND THE CONTRACTOR MUST PROVIDE 48 HOURS NOTICE TO ALL ATTENDEES PRIOR TO THE START OF THE MEETING.
14. APPROPRIATE WARNING SIGNS, MARKERS, BARRICADES AND/OR FLAG MEN SHALL BE PROVIDED TO REGULATE TRAFFIC. CONSTRUCTION TRAFFIC CONTROLS SHALL BE IMPLEMENTED AND OPERATED ACCORDING TO THE MASS DEPARTMENT OF TRANSPORTATION, THE MANUAL ON UNIFORM TRAFFIC CONTROL DEVICES (MUTCD) AND THE LOCAL AUTHORITY.
15. THE CONTRACTOR IS RESPONSIBLE FOR OBTAINING ADDITIONAL BENCHMARK INFORMATION IF REQUIRED. THE CONTRACTOR IS RESPONSIBLE FOR LOCATING AND PROTECTING ALL EXISTING BENCHMARKS. IF IT IS NECESSARY TO RELOCATE A BENCHMARK, IT SHALL BE RELOCATED BY A MASSACHUSETTS PROFESSIONAL LAND SURVEYOR AND DONE SO AT THE CONTRACTOR'S EXPENSE.
16. ALL BUILDING DIMENSIONS ARE MEASURED TO THE OUTSIDE FACE OF THE BUILDING.
17. ALL RADII ARE 3 FEET UNLESS OTHERWISE NOTED.
18. ALL PARKING LOT AND AISLE DIMENSIONS ARE TAKEN FROM THE FACE OF CURB AND INDICATE EDGE OF PAVEMENT.
19. CONSTRUCTION DURING WET WEATHER OR WINTER CONDITIONS IS TO BE ANTICIPATED AND PROVISIONS TO ADEQUATELY ADDRESS THESE CONDITIONS SHALL BE THE RESPONSIBILITY OF THE CONTRACTOR AT NO ADDITIONAL COST.
20. THE CONTRACTOR IS RESPONSIBLE FOR OBTAINING AND PAYING FOR ANY PERMITS AND/OR CONNECTION FEES REQUIRED TO CARRY OUT THE WORK INCLUDING BUT NOT LIMITED TO DEMOLITION.
21. DISPOSAL OF ALL DEMOLISHED MATERIALS INCLUDING EXISTING MISC. CONSTRUCTION DEBRIS IS THE RESPONSIBILITY OF THE CONTRACTOR AND MUST BE DISPOSED OF OFF–SITE IN ACCORDANCE WITH ALL FEDERAL, STATE, AND LOCAL MUNICIPAL REQUIREMENTS AT NO ADDITIONAL COST.
22. ALL DISTURBED AREAS NOT NOTED TO RECEIVE OTHER TREATMENT ARE TO RECEIVE SIX INCHES (6") MINIMUM OF TOPSOIL & SEED, AND BE MAINTAINED UNTIL ESTABLISHED & ACCEPTED.
23. EXISTING STRUCTURES WITHIN CONSTRUCTION LIMITS ARE TO BE PROTECTED, ABANDONED, REMOVED OR RELOCATED AS NECESSARY.
24. CONTRACTOR SHALL BE RESPONSIBLE FOR ALL RELOCATIONS, INCLUDING BUT NOT LIMITED TO, ALL UTILITIES, STORM DRAINAGE, SIGNS, & POLES, ETC. AS REQUIRED. ALL WORK SHALL BE IN ACCORDANCE WITH THE LOCAL MUNICIPALITY'S GOVERNING AUTHORITY'S SPECIFICATIONS AND SHALL BE APPROVED BY SAME.
25. THE CONTRACTOR SHALL COORDINATE WITH ALL UTILITY COMPANIES TO DETERMINE EXACT POINT OF SERVICE CONNECTION AND DISCONNECTION AT EXISTING UTILITY.
26. ALL ELEVATIONS SHOWN ARE IN REFERENCE TO THE BENCHMARKS SHOWN ON THE EXISTING CONDITIONS SITE PLAN AND MUST BE VERIFIED BY THE GENERAL CONTRACTOR AT GROUNDBREAKING.
27. CONTRACTOR IS RESPONSIBLE FOR DIGGING TEST HOLES AND VERIFYING ANY EXISTING UTILITY OR STRUCTURE PRIOR TO CONSTRUCTION. CONTRACTOR SHALL VERIFY THAT BASED ON EXACT LOCATION OF EXISTING UTILITIES, THERE ARE NO CONFLICTS BETWEEN THE EXISTING AND THE PROPOSED UTILITIES/DRAINAGE STRUCTURES.
28. THE CONTRACTOR SHALL ADHERE TO ALL PERMIT CONDITIONS PROVIDED BY ALL GOVERNING AGENCIES AT NO ADDITIONAL COSTS. THIS INCLUDES BUT IS NOT LIMITED TO BUILDING PERMITS, DEMOLITION PERMITS, PLUMBING, GAS, AND ELECTRICAL PERMITS. PERMITS FROM THE PLANNING BOARD OR CITY COUNCIL.
29. DURING EXCAVATION, ANY EXISTING EARTH CUT MATERIALS THAT DO NOT MEET THE "ORDINARY FILL" SPECIFICATIONS OR "LOAM" SPECIFICATIONS AND CANNOT BE REUSED SHALL BE REMOVED OFFSITE BY THE CONTRACTOR AT NO ADDITIONAL COST TO THE OWNERS. MATERIAL WHICH DOES NOT MEET THE SPECIFICATION INCLUDES ALL BOULDERS, ROCKS, CONSTRUCTION DEBRIS, AND MISC. MATERIAL. PRIOR TO REUSE, CONTRACTOR TO PROVIDE TESTING REPORT OF SIEVE ANALYSIS TO ENGINEER FOR APPROVAL. CONTRACTOR CAN AMEND MATERIALS AND CONTINUE TO RETEST AS NECESSARY AT NO ADDITIONAL COST TO OWNER. AFTER AMENDING, IF MATERIAL STILL DOES NOT MEET THE SPECIFICATIONS, IT IS TO BE REMOVED FROM SITE AT NO ADDITIONAL COST TO THE OWNER AND IN ACCORDANCE WITH ALL FEDERAL, STATE, AND LOCAL LAWS AND REGULATIONS.
30. ANY PROPOSED SIGNAGE SHALL BE APPROVED BY SEPARATE APPLICATION TO THE APPROPRIATE MUNICIPAL AUTHORITY INCLUDING BUT NOT LIMITED TO THE ZONING BOARD OF APPEALS AND CITY COUNCIL. ALL PROPOSED SIGNAGE MUST MEET THE REQUIREMENTS OF THE LOCAL ZONING CODE.

GRADING & DRAINAGE NOTES:

1. EXISTING PAVEMENT SHALL BE SAW–CUT AND PAVEMENT JOINT SHALL BE INSTALLED WHERE NECESSARY TO ENSURE A SMOOTH CONTINUOUS GRADE.
2. PITCH EVENLY BETWEEN SPOT GRADES. ALL PAVED AREAS MUST PITCH TO DRAIN AT A MINIMUM OF 1/8" PER FOOT UNLESS OTHERWISE SPECIFIED. ANY DISCREPANCIES NOT ALLOWING THIS MINIMUM PITCH SHALL BE REPORTED TO THE ENGINEER PRIOR TO CONTINUING WORK.
3. ALL GRADING OPERATIONS SHALL BE COORDINATED WITH THE APPROPRIATE UTILITY COMPANIES.
4. IN LANDSCAPED AREAS THE TOP ELEVATION OF MANHOLES SHALL MATCH THE FINISH GRADE OF THE TOPSOIL. IN PAVED AREAS THE TOP ELEVATIONS OF MANHOLES SHALL MATCH FINISH GRADE.
5. ALL AREAS DISTURBED DURING CONSTRUCTION SHALL BE STABILIZED AS SOON AS POSSIBLE UPON COMPLETION OF CONSTRUCTION WORK IN THE AREA.
6. TEMPORARY TUBULAR BARRIER PROTECTION AND/OR SILT SACKS SHALL BE INSTALLED AND MAINTAINED AT EXISTING DRAINAGE STRUCTURES DURING CONSTRUCTION, TO PREVENT SEDIMENT LADEN RUNOFF FROM ENTERING THE DRAINAGE SYSTEM.
7. CONTRACTOR IS RESPONSIBLE FOR DEMOLITION OF EXISTING STRUCTURES INCLUDING REMOVAL OF ANY EXISTING UTILITIES SERVING THE STRUCTURE PER DEMOLITION PLAN.
8. ALL CATCH BASINS, MANHOLES, INFILTRATION SYSTEMS, AND WATER QUALITY STRUCTURES ARE TO BE CLEANED TO REMOVE ALL CONSTRUCTION SILT AND DEBRIS PRIOR TO FINAL APPROVAL.
9. IF ANY EXISTING UTILITY STRUCTURES TO REMAIN ARE DAMAGED DURING CONSTRUCTION, IT SHALL BE THE CONTRACTOR'S RESPONSIBILITY TO REPAIR AND/OR REPLACE THE EXISTING STRUCTURE AS NECESSARY TO RETURN IT TO EXISTING CONDITIONS OR BETTER AT NO ADDITIONAL COST.
10. ALL STORM PIPES ENTERING STRUCTURES SHALL BE GROUTED TO ENSURE CONNECTION AT STRUCTURE IS WATERTIGHT.
11. ALL STORM DRAIN MANHOLES SHALL HAVE TRAFFIC BEARING RING & COVERS & SHALL BE LABELED "DRAIN".
12. THE CONTRACTOR SHALL ADHERE TO ALL TERMS & CONDITIONS AS OUTLINED IN THE GENERAL N.P.D.E.S. PERMIT FOR STORM WATER DISCHARGE ASSOCIATED WITH CONSTRUCTION ACTIVITIES.
13. CONTRACTOR SHALL ENSURE POSITIVE DRAINAGE AWAY FROM BUILDINGS FOR ALL NATURAL AND PAVED AREAS.
14. CONTRACTOR SHALL APPLY STABILIZATION FABRIC TO ALL SLOPES STEEPER THAN 3H:1V.
15. ALL DRAINAGE SYSTEM COMPONENTS SHALL CONFORM TO LOCAL REQUIREMENTS.

UTILITY NOTES:

1. THE LATEST STANDARDS OF THE LOCAL MUNICIPALITY SHALL BE FOLLOWED WHEN INSTALLING ANY STORM DRAIN WORK. STORM DRAIN WORK WILL BE INSPECTED BY THE LOCAL GOVERNING AUTHORITY PERSONNEL AND ALL COSTS SHALL BE THE RESPONSIBILITY OF THE CONTRACTOR.
2. WHERE AN EXISTING UTILITY IS FOUND TO CONFLICT WITH THE PROPOSED WORK, THE LOCATION, ELEVATION AND SIZE OF THE UTILITY SHALL BE ACCURATELY DETERMINED WITHOUT DELAY BY THE CONTRACTOR, AND THE INFORMATION FURNISHED TO THE ENGINEER FOR RESOLUTION.
3. ABANDONED EXISTING UTILITIES AND UTILITIES TO BE ABANDONED SHALL EITHER BE ABANDONED IN PLACE AS NOTED OR SHALL BE REMOVED AND DISPOSED OF AS SPECIFIED. ALL UTILITIES SCHEDULED FOR ABANDONMENT OR REMOVAL AND DISPOSAL MUST BE COORDINATED BY THE CONTRACTOR WITH THE RESPECTIVE UTILITY OWNER. WHEN ABANDONED UTILITIES ARE TO BE LEFT IN PLACE, PLUG OR CAP THE ENDS OF THE CONDUITS AND PIPES. REMOVE ABANDONED UTILITY MANHOLES, JUNCTION BOXES AND SIMILAR STRUCTURES TO A MINIMUM DEPTH OF 4 FEET BELOW FINISHED GRADE AND PUNCTURE OR BREAK THE BOTTOM SLABS OF MANHOLES AND SIMILAR STRUCTURE TO ALLOW DRAINAGE. BACKFILL AND COMPACT EXCAVATIONS RESULTING FROM REMOVAL OF UTILITY FACILITATES, AS REQUIRED TO RESTORE THE ORIGINAL GRADE.
4. THE CONTRACTOR SHALL MAKE ARRANGEMENTS FOR THE ALTERATION AND ADJUSTMENTS OF NATURAL GAS, ELECTRIC, TELEPHONE AND ANY OTHER UTILITY BY THE UTILITY OWNER.
5. THE CONTRACTOR SHALL USE THE FOLLOWING PIPE MATERIALS:
   - DRAIN – HDPE (HIGH DENSITY CORRUGATED POLYETHYLENE PIPE WITH SMOOTH INNER WALL), ASTM D2321 (UNLESS OTHERWISE SPECIFIED ON PLAN)
8. BEFORE UTILITY WORK BEGINS, THE CONTRACTOR WILL COORDINATE WITH THE LOCAL MUNICIPALITY FOR THE APPROPRIATE PERMIT AND INSPECTION FEES.
9. A MINIMUM OF 10 FEET CLEAR HORIZONTALLY SHALL BE MAINTAINED BETWEEN WATER MAINS AND SANITARY SEWER MAINS AND/OR STORM DRAINS. WHENEVER CONDITIONS PREVENT A LATERAL SEPARATION OF 10 FEET TO A WATER MAIN, THE WATER MAIN SHALL BE LAID IN A SEPARATE TRENCH AND THE DIFFERENCE IN ELEVATION BETWEEN THE WATER MAIN AND THE SEWER MAIN SHALL BE AT LEAST 18 INCHES.
10. ALL FILL MATERIAL IS TO BE IN PLACE, AND COMPACTED BEFORE INSTALLATION OF PROPOSED UTILITIES.
11. CONTRACTOR SHALL NOTIFY THE UTILITY AUTHORITY'S INSPECTORS 72 HOURS BEFORE CONNECTING TO ANY EXISTING LINE.
12. MINIMUM TRENCH WIDTH SHALL BE 2 FEET.
13. CONTRACTOR SHALL MAINTAIN A MINIMUM OF 5'–0" COVER AND A MAXIMUM OF 8'–0" COVER ON ALL WATERLINES.
14. IN THE EVENT OF A VERTICAL CONFLICT BETWEEN WATERLINES, SANITARY LINES, STORM LINES AND GAS LINES (EXISTING AND PROPOSED), THE SANITARY LINE SHALL BE DUCTILE IRON PIPE WITH MECHANICAL JOINTS AT LEAST 10 FEET ON BOTH SIDES OF CROSSING, THE WATERLINE SHALL HAVE MECHANICAL JOINTS WITH APPROPRIATE THRUST BLOCKING AS REQUIRED TO PROVIDE A MINIMUM OF 18" CLEARANCE BETWEEN THE PIPES. WHERE THE WATERLINE IS LESS THAN THE 18" VERTICAL CLEARANCE AND MEETING 10' HORIZONTAL CLEARANCE CANNOT BE MET, THE WATER MUST BE ENCASED IN CONCRETE.
15. ALL CONCRETE FOR ENCASEMENTS SHALL HAVE A MINIMUM 28 DAY COMPRESSION STRENGTH OF 3000 P.S.I.
16. CONTRACTOR IS RESPONSIBLE FOR COMPLYING WITH THE SPECIFICATIONS OF THE LOCAL AUTHORITIES WITH REGARDS TO MATERIALS AND INSTALLATION OF THE WATER, SEWER, GAS AND ELECTRICAL AND TELECOMMUNICATIONS LINES.
17. ALL NECESSARY INSPECTIONS AND/OR CERTIFICATIONS REQUIRED BY CODES AND/OR UTILITY SERVICE COMPANIES SHALL BE PERFORMED PRIOR TO ANNOUNCED BUILDING POSSESSION AND THE FINAL CONNECTION OF SERVICE.
18. DRAWINGS DO NOT NECESSARILY SHOW ALL EXISTING UTILITIES.

EROSION & SEDIMENTATION CONTROL NOTES:

1. EROSION CONTROL SHALL BE INSTALLED PRIOR TO CONSTRUCTION AND SHALL BE ADEQUATE TO MAINTAIN SEDIMENT ON SITE. ANY MODIFICATIONS TO SILT CONTROLS SHOWN ON THE APPROVED PLANS AS A RESULT OF ACTUAL FIELD CONDITIONS OR CONSTRUCTION PRACTICES SHALL BE INSTALLED IN ACCORDANCE WITH B.M.P. (BEST MANAGEMENT PRACTICES) PER THE E.P.A. 2020 "CONSTRUCTION GENERAL PERMIT" MANUAL, AND MASSACHUSETTS 2003 EROSION & SEDIMENT CONTROL GUIDELINES FOR URBAN AND SUBURBAN AREAS, ANY SUCH MODIFICATIONS FROM THE ABOVE MANUALS SHALL BE INSTALLED AS APPROVED BY THE ENGINEER OR THE LOCAL MUNICIPALITY.
2. AREAS OF EXPOSED SOIL UNDERGOING CONSTRUCTION THAT WILL NOT BE COVERED AND OR FINISHED GRADED SHALL BE STABILIZED AS SOON AS PRACTICABLE BUT IN NO CASE MORE THAN 14 DAYS AFTER THE CONSTRUCTION ACTIVITY (UNLESS MUNICIPALITY HAS STRICTER REQUIREMENTS WHICH SHALL BE FOLLOWED) IN THAT PORTION OF THE SITE HAS TEMPORARILY OR PERMANENTLY CEASED. TEMPORARY EROSION CONTROL MEASURES SHALL INCLUDE EROSION CONTROL MESH, NETTING OR MULCH AS DIRECTED BY THE OWNER'S REPRESENTATIVE AND SHOWN ON THE DESIGN PLANS. IF MULCH IS USED, STRAW MULCH SHALL BE APPLIED AT THE RATE OF 4 BALES PER 1,000 SQUARE FEET. APPLICATION AREA SHALL BE SUFFICIENTLY COVERED WITH MULCH TO AVOID ANY VISIBLE SOIL EXPOSURE. MULCH SHALL BE KEPT MOIST TO AVOID LOSS DUE TO WIND. MULCH AND NETTING SHALL BE APPLIED IN THE BASE OF ALL GRASSED WATERWAYS, IN VEGETATIVE SLOPES WHICH EXCEED 15% AND DISTURBED AREAS WITHIN 100 FEET OF WETLANDS OR STREAMS.
3. IF DISTURBED AREAS DO NOT RECEIVE FINAL SEEDING BY OCTOBER 1ST OF THE CONSTRUCTION YEAR, THEN ALL DISTURBED AREAS SHALL BE SEEDED WITH A WINTER COVER CROP AT THE RATE OF 3 LBS PER 1,000 SQUARE FEET. WINTER SEEDING SHALL BE COVERED WITH EROSION CONTROL MESH (MULCH AND NETTING). HEAVY GRADE MATS SHALL BE USED IN THE BASE OF ALL GRASSED WATERWAYS ON VEGETATED SLOPES IN EXCESS OF 15%, AND ANY DISTURBED AREAS WITHIN 100 FEET OF WETLANDS OR STREAMS. MULCH AND NETTING SHALL ALSO BE PROVIDED FOR ADDITIONAL WINTER PROTECTION.
4. ALL TOPSOIL SHALL BE COLLECTED, STOCKPILED, SEEDED WITH RYE AT 3LBS PER 1,000 SQUARE FOOT AND MULCHED, AND REUSED AS REQUIRED. TUBULAR BARRIERS SHALL BE PLACED DOWN GRADIENT FROM STOCKPILED LOAM. LOAM SHALL BE STOCKPILED AT LOCATIONS DESIGNATED BY THE OWNER AND ENGINEER.
5. ALL TUBULAR BARRIERS, SILT SACKS, AND EROSION CONTROL BERMS SHALL BE INSTALLED ACCORDING TO THE SITE PREPARATION PLAN. THESE SHALL BE MAINTAINED DURING DEVELOPMENT TO REMOVE SEDIMENT FROM RUNOFF WATER. ALL THE FILTER BARRIERS AND EROSION CONTROL BERMS SHALL BE INSPECTED AFTER ANY RAINFALL OR RUNOFF EVENT, MAINTAINED AND CLEANED UNTIL ALL AREAS HAVE AT LEAST 85–90% VIGOROUS PERENNIAL COVER OF GRASSES.
6. ADJACENT ROADS SHALL BE PERIODICALLY SWEPT OR WASHED TO AVOID TRACKING MUD, DUST OR DEBRIS FROM THE CONSTRUCTION AREA AS OFTEN AS NECESSARY (WHICH COULD BE ON A DAILY BASIS) TO REMOVE ANY SOIL OR SEDIMENTS AT NO ADDITIONAL COST TO THE OWNER. A WATERING TRUCK WILL BE USED TO PERIODICALLY SPRINKLE CONSTRUCTION AREAS IN ORDER TO KEEP THE LEVEL OF DUST TO A MINIMUM DURING THE DRY MONTHS AT NO ADDITIONAL COST TO THE OWNER.
7. THE CONTRACTOR SHALL USE EXTREME CAUTION TO AVOID ALLOWING SEDIMENTS TO ENTER THE STORM DRAIN SYSTEM DURING CONSTRUCTION. BOTH EXISTING AND PROPOSED CATCH BASIN INLETS SHALL BE PROTECTED DURING CONSTRUCTION BY THE USE SILT SACKS AND/OR TUBULAR BARRIERS AROUND EACH INLET AS NOTED ON THE PLANS. INLET PROTECTION MAY BE REMOVED ONLY AFTER FINISHED AREAS ARE PAVED AND THE VEGETATED SLOPES ARE ESTABLISHED WITH AT LEAST 85–90% OF VIGOROUS PERENNIAL GROWTH.
8. AS APPLICABLE, EROSION CONTROL MESH SHALL BE APPLIED IN ACCORDANCE WITH THE PLANS OVER ALL FINISHED SEEDED AREAS AS SPECIFIED ON THE DESIGN PLANS.
9. AT A MINIMUM, ALL TUBULAR BARRIERS AND FILTER FABRIC SHALL REMAIN IN PLACE UNTIL SEEDINGS OR PLANTINGS HAVE BECOME 85–90% ESTABLISHED. THE LOCAL CONSERVATION COMMISSION MUST APPROVE THE REMOVAL OR RELOCATION OF ANY OF THE TUBULAR BARRIERS AND FILTER FABRIC. ONCE THE TUBULAR BARRIERS ARE REMOVED THE AREAS ARE TO BE LOAMED AND SEEDED TO ACHIEVE FULL STABILIZATION.
10. AT THE OWNER'S DISCRETION ADDITIONAL EROSION CONTROL MEASURES MAY BE REQUIRED TO MAINTAIN STABILITY OF EARTHWORKS AND FINISHED GRADED AREAS. THE CONTRACTOR, AT HIS EXPENSE, WILL BE RESPONSIBLE FOR PROVIDING AND INSTALLING ANY ADDITIONAL MEASURES AS SPECIFIED BY THE OWNER. THIS INCLUDES BUT IS NOT LIMITED TO REQUESTS BY MA DEP, THE ENGINEER AND THE LOCAL MUNICIPALITY, AS AUTHORIZED BY THE OWNER. FAILURE TO COMPLY WITH THE OWNER'S DIRECTIONS WILL RESULT IN DISCONTINUATION OF CONSTRUCTION ACTIVITIES.
11. INSPECTIONS AND MONITORING MAINTENANCE MEASURES SHALL BE APPLIED AS NEEDED DURING THE ENTIRE CONSTRUCTION CYCLE. WEEKLY INSPECTIONS SHALL BE HELD THROUGH THE DURATION OF CONSTRUCTION ACTIVITY. WEEKLY INSPECTION REPORTS SHALL BE MAINTAINED BY THE CONTRACTOR AND LOCATED IN THE CONTRACTORS FIELD OFFICE ONSITE. IN ADDITION TO THE NORMAL WEEKLY INSPECTIONS, THE CONTRACTOR SHALL PERFORM AN INSPECTION OF ALL EROSION CONTROL MEASURES AFTER EACH RAINFALL OR RUNOFF EVENT, AND PERFORM THE NECESSARY REPAIRS. THE INSPECTIONS SHALL INCLUDE BUT NOT BE LIMITED TO THE SITE'S DOWN STREAM DISCHARGE POINTS.
12. IF ANY EVIDENCE OF SEDIMENTATION IS OBSERVED AT THE STORMWATER MANAGEMENT AREA INLETS, THE CONTRACTOR SHALL, AT HIS OWN EXPENSE, PROVIDE A PLAN TO THE ENGINEER TO REMOVE ANY ACCUMULATED SEDIMENT IN THESE AREAS. THE CONTRACTOR SHALL ALSO IMMEDIATELY PROVIDE ADDITIONAL ON SITE EROSION AND SEDIMENTATION CONTROL MEASURES TO PREVENT FURTHER DEGRADATION OF THE AREA.
13. FOLLOWING THE TEMPORARY OR FINAL SEEDINGS, THE CONTRACTOR SHALL INSPECT THE WORK AREA SEMI–MONTHLY TO ENSURE THE AREAS HAVE A MINIMUM OF 85–90% VEGETATED VIGOROUS GROWTH. RE–SEEDING SHALL BE CARRIED OUT BY THE CONTRACTOR WITH FOLLOW UP INSPECTIONS IN THE EVENT OF ANY FAILURES UNTIL VEGETATION IS ADEQUATELY ESTABLISHED.
14. CONTRACTOR & ALL SITE SUBCONTRACTORS SHALL BE FAMILIAR WITH & FOLLOW ALL APPROVED PERMITS AND CONDITIONS. CONTRACTOR SHALL MAINTAIN A COPY OF ALL APPROVED PERMITS ONSITE. ALL CONDITIONS & RECOMMENDATIONS WITHIN THE APPROVED PERMITS SHALL BE COMPLETED.
15. ALL EROSION MEASURES SHALL BE INSTALLED PRIOR TO CONSTRUCTION AND SHALL BE ADEQUATE TO MAINTAIN SEDIMENT ON SITE. ANY MODIFICATIONS SHALL BE INSTALLED AS DIRECTED BY THE ENGINEER OR THE LOCAL MUNICIPALITY.
16. EROSION AND SEDIMENTATION CONTROL MEASURES SHALL BE MAINTAINED DURING CONSTRUCTION, AND SHALL REMAIN IN PLACE UNTIL ALL SITE WORK IS COMPLETE AND GROUND COVER IS ESTABLISHED.
17. TOP OF STOCKPILES SHALL BE COVERED IN SUCH MANNER THAT STORMWATER DOES NOT INFILTRATE THE MATERIALS AND THEREBY RENDER THE SAME UNSUITABLE FOR FILL USE.
18. ALL DISTURBED OR EXPOSED AREAS SUBJECT TO EROSION SHALL BE STABILIZED WITH MULCH OR SEEDED FOR TEMPORARY VEGETATIVE COVER. NO AREA, SUBJECT TO EROSION SHALL BE LEFT DISTURBED AND UNSTABILIZED FOR PERIODS LONGER THAN IS ABSOLUTELY NECESSARY TO CARRY OUT THAT PORTION OF THE CONSTRUCTION WORK OR SIX MONTHS AFTER SOIL HAS BEEN DISTURBED WHICHEVER IS LESS.
19. CULVERT/PIPE INLETS AND OUTFALLS SHALL BE PROTECTED BY TUBULAR BARRIER FILTERS AND STONE CHECK DAMS UNTIL DISTURBED AREAS ARE PERMANENTLY STABILIZED.
20. TUBULAR BARRIER DIKES SHALL BE CONSTRUCTED AT ALL EXISTING & PROPOSED CATCH BASINS. NO SEDIMENTATION SHALL ENTER THE ON–SITE OR OFF–SITE DRAINAGE SYSTEMS AT ANY TIME.
21. ALL EROSION CONTROL MEASURES SHALL BE ROUTINELY INSPECTED, CLEANED AND REPAIRED OR REPLACED AS NECESSARY THROUGHOUT ALL PHASES OF CONSTRUCTION. IN ADDITION, INSPECTIONS SHALL TAKE PLACE WEEKLY AND BEFORE AND AFTER EACH RAINFALL EVENT.
22. ALL PROPOSED SLOPES STEEPER THAN 3:1 SHALL BE STABILIZED WITH JUTE MESH AND PROTECTED FROM EROSION UNTIL WORK IS COMPLETE AND GROUND COVER IS ESTABLISHED.
23. THE CONTRACTOR SHALL KEEP ON SITE AT ALL TIMES ADDITIONAL TUBULAR BARRIERS FOR INSTALLATION AT THE DIRECTION OF THE ENGINEER OR THE TOWN ENGINEER TO MITIGATE ANY EMERGENCY CONDITION.
24. AS CONSTRUCTION DISTURBANCE IS GREATER THAN 1 ACRE, A NATIONAL POLLUTANT DISCHARGE ELIMINATION SYSTEM (NPDES) CONSTRUCTION GENERAL PERMIT NOI, AND STORM WATER POLLUTION PREVENTION PLAN (SWPPP) WILL NEED TO BE SUBMITTED TO THE EPA. THE NPDES PERMIT FOR STORM WATER DISCHARGE, & CONSTRUCTION GENERAL PERMIT NOI WILL BE REQUIRED TO BE SUBMITTED AT LEAST 14 DAYS PRIOR TO COMMENCING CONSTRUCTION BY THE CONTRACTOR.
25. OWNER AND CONTRACTOR ARE RESPONSIBLE FOR COMPLIANCE WITH THE CONSTRUCTION GENERAL PERMIT NOI. WEEKLY SWPPP INSPECTION REPORTS TO BE PERFORMED BY CONTRACTOR. COPIES OF ALL SWPPP INSPECTION REPORTS SHALL BE PROVIDED TO THE LOCAL MUNICIPALITY, EPA, DEP, OR ANY OTHER AUTHORITY REQUESTING WITHIN 3 DAYS OF EACH INSPECTION.
26. APPLICABLE WORK AND MATERIALS SHALL COMPLY WITH ALL LOCAL, MA DEP, EPA CONSTRUCTION GENERAL PERMIT STANDARDS. ALL CONSTRUCTION SHALL CONFORM TO THE APPLICABLE SITE PLAN REGULATIONS FROM THE LOCAL AND USDA SOIL CONSERVATION SERVICE VEGETATIVE PRACTICES IN SITE DEVELOPMENT.
27. A WATERING TRUCK SHALL BE USED TO PERIODICALLY SPRINKLE CONSTRUCTION AREAS IN ORDER TO KEEP THE LEVEL OF DUST TO A MINIMUM DURING THE DRY MONTHS AND AS REQUIRED.
28. IF DEWATERING IS NECESSARY IT SHALL ONLY BE COMPLETED AS FOLLOWS: THE DISCHARGE SHALL BE STOPPED IMMEDIATELY IF THE RECEIVING AREA SHOWS ANY SIGN OF INSTABILITY OR EROSION. ALL CHANNELS, SWALES, AND DITCHES DUG FOR DISCHARGING WATER FROM THE EXCAVATED AREA SHALL BE STABLE PRIOR TO DIRECTING DISCHARGE TO THEM. IF A CONSTRUCTION EQUIPMENT BUCKET IS USED, IT SHALL EMPTY THE MATERIAL TO A STABLE AREA. NO DEWATERING SHALL OCCUR DURING PERIODS OF INTENSE, HEAVY RAIN. FLOW TO THE SEDIMENT REMOVAL STRUCTURE SHALL NOT EXCEED THE STRUCTURE'S CAPACITY TO SETTLE AND FILTER FLOW OR ITS VOLUME CAPACITY. WHENEVER POSSIBLE, THE DISCHARGE FROM THE SEDIMENT REMOVAL STRUCTURE SHALL DRAIN TO A WELL–VEGETATED BUFFER BY SHEET FLOW WHILE MAXIMIZING THE DISTANCE TO THE NEAREST WATER RESOURCE AND MINIMIZING THE SLOPE OF THE BUFFER AREA. THERE SHALL BE NO DIRECT DISCHARGE TO EXISTING WETLANDS OR STREAMS. ALL DISCHARGE SHALL BE IN COMPLIANCE WITH STATE, LOCAL, AND FEDERAL REQUIREMENTS.
29. INITIATE STABILIZATION OF EXPOSED AREAS IMMEDIATELY IF CONSTRUCTION WORK TEMPORARILY OR PERMANENTLY CEASES.
30. ALL DISCHARGES FROM POLLUTION SOURCES ARE PROHIBITED ONSITE SUCH AS FUELS, WASTEWATER FROM WASH OUT OF CONCRETE, WASTEWATER FROM CLEAN OUT OF PAINTS, FORM RELEASE OILS, SOLVENTS, ADHESIVES, CURING COMPOUNDS, POLLUTANTS USED FOR MAINTENANCE OF VEHICLES AND EQUIPMENT, SOAPS & SOLVENTS, TOXIC OR HAZARDOUS SUBSTANCES, CHEMICALS AND OILS. IF A POLLUTANT IS DISCHARGED IT NEEDS TO BE IMMEDIATELY CLEANED UP BY REMOVING THE CHEMICAL AND AFFECTED SOIL OR AREA OF SPILL FROM THE SITE IN ACCORDANCE WITH BOTH THE MANUFACTURER RECOMMENDATIONS, FEDERAL, STATE, AND LOCAL REQUIREMENTS. DO NOT HOSE DOWN AND SPREAD SPILLED ITEM. ALL CHEMICALS USED ON THE SITE SHALL BE IN LEAK–PROOF CONTAINERS STORED AWAY FROM WETLANDS, SURFACE WATERS, STORMWATER INLETS, AND DRAINAGE MEASURES. SPILL KITS SHALL BE AVAILABLE ONSITE FOR EMERGENCY USE. THERE SHALL BE A SECONDARY CONTAINMENT MEASURE OF ALL CHEMICALS IN ADDITION TO SPILL–PROOF CONTAINERS.
31. PRIOR TO COMMENCEMENT OF CONSTRUCTION, APPLICABLE CONTRACTOR PERSONNEL MUST HAVE AN UNDERSTANDING OF THE EPA CONSTRUCTION GENERAL PERMIT REQUIREMENTS AND THEIR SPECIFIC RESPONSIBILITIES UNDER THE PERMIT. AT A MINIMUM, PERSONNEL MUST BE TRAINED AND UNDERSTAND THE F

NOTES:

1. THE INFORMATION SHOWN ON THIS PLAN IS THE SOLE PROPERTY OF ALLEN & MAJOR ASSOCIATES, INC. ITS INTENDED USE IS TO PROVIDE INFORMATION. ANY ALTERATION, MISUSE, OR RECALCULATION OF INFORMATION OR DATA WITHOUT THE EXPRESSED, WRITTEN CONSENT OF ALLEN & MAJOR ASSOCIATES, INC. IS STRICTLY PROHIBITED.

2. BASE PLAN TAKEN FROM PLAN ENTITLED "EXISTING CONDITIONS – V–101" PREPARED BY ALLEN & MAJOR ASSOCIATES, DATED SEPTEMBER 8, 2023, REVISED THROUGH APRIL 25, 2024, ORIGINAL SCALE 1"=40', AND WAS GATHERED FROM AN ON–THE–GROUND SURVEY.

3. THE LOCATIONS OF EXISTING UNDERGROUND UTILITIES ARE SHOWN IN AN APPROXIMATE WAY ONLY AND HAVE NOT BEEN INDEPENDENTLY VERIFIED BY THE OWNER OR IT'S REPRESENTATIVE. THE CONTRACTOR SHALL DETERMINE THE EXACT LOCATION OF ALL EXISTING UTILITIES BEFORE COMMENCING WORK, AND AGREES TO BE FULLY RESPONSIBLE FOR ANY AND ALL DAMAGES WHICH MIGHT BE OCCASIONED BY THE CONTRACTOR'S FAILURE TO EXACTLY LOCATE AND PRESERVE ANY AND ALL UNDERGROUND UTILITIES.

4. ALL ELEVATIONS REFER TO NAVD 88.

5. UTILITIES INCLUDING DOMESTIC WATER, FIRE PROTECTION WATER AND FIRE DEPT. CONNECTION, GAS, ELECTRICAL AND TELECOM LINES, SIZES, MATERIALS AND LOCATIONS ARE FOR COORDINATION PURPOSES ONLY AND SHALL BE CONFIRMED WITH ENGINEER FROM EACH APPLICABLE DISCIPLINE PRIOR TO CONSTRUCTION. ALL UTILITIES SHOWN ON THIS PLAN ARE FOR COORDINATION PURPOSES ONLY. INDIVIDUAL UTILITY PROVIDERS AND MEP ENGINEER SHALL DETERMINE THE FINAL LOCATION, SIZE AND MATERIAL OF EACH UTILITY.

6. CONTRACTOR SHALL VERIFY IN FIELD (V.I.F.) ALL AFFECTED EXISTING UTILITIES LOCATION, SIZE AND MATERIALS, INCLUDING WATERLINES.

7. TEMPORARY SEDIMENT BASINS HAVE BEEN SIZED FOR A MINIMUM OF 3,600 C.F PER ACRE.

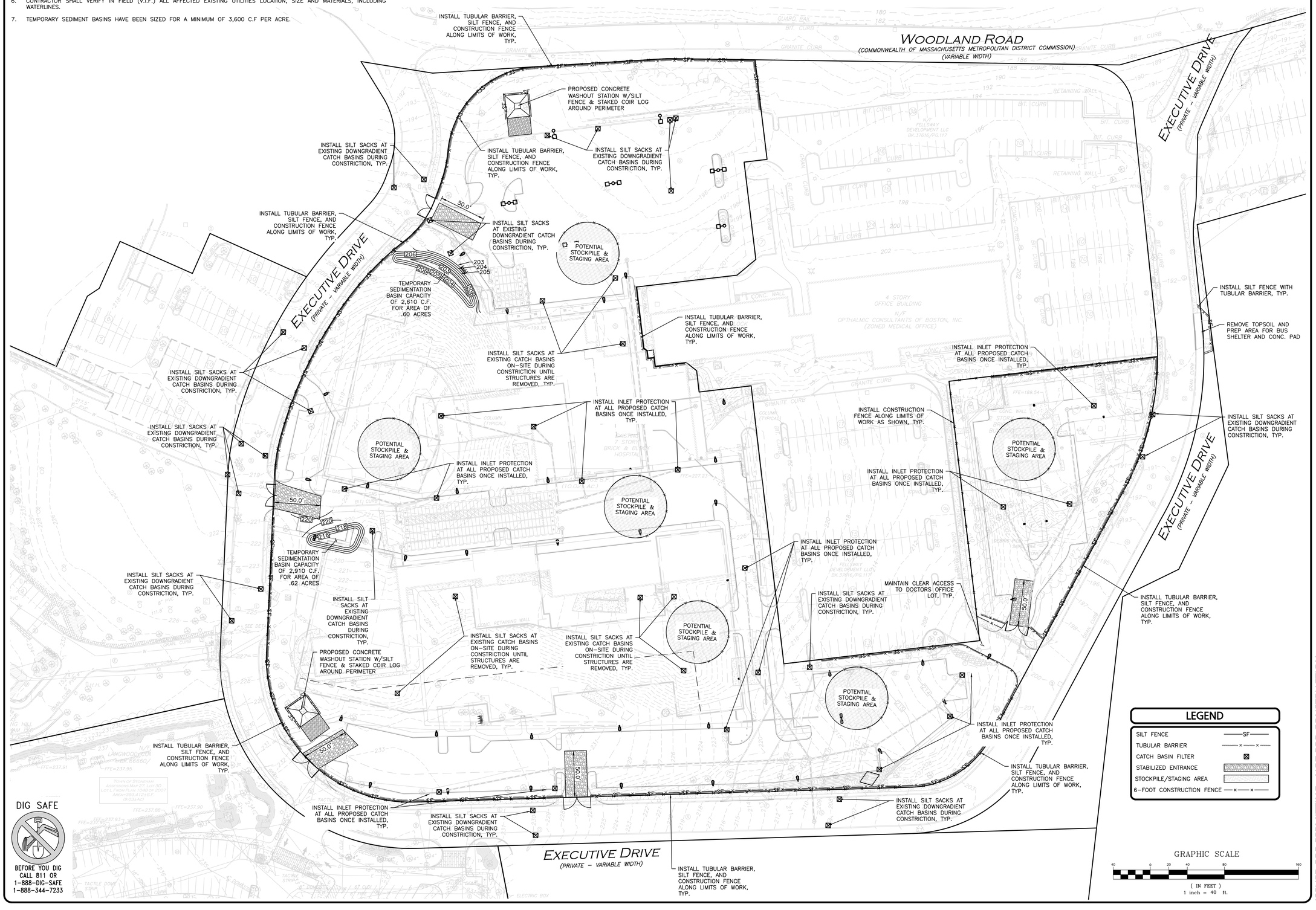

ISSUED FOR PERMITTING - NOT FOR CONSTRUCTION

REV	DATE	DESCRIPTION
1	2024-04-30	REVISED PER PEER REVIEW COMMENTS

PROFESSIONAL ENGINEER FOR ALLEN & MAJOR ASSOCIATES, INC.

APPLICANT\OWNER:
FELLSWAY DEVELOPMENT LLC
c/o THE GUTIERREZ CO.
200 SUMMIT DRIVE, SUITE 400
BURLINGTON, MA 01803

PROJECT:
THE RESIDENCES AT SPOT POND
MULTI-FAMILY HOUSING
5 WOODLAND ROAD
STONEHAM, MA 02180

PROJECT NO.	1145-01T	DATE:	2023-11-16
SCALE:	1"=40'	DWG. NAME:	C-1145-01T
DESIGNED BY:	DMR/MTB	CHECKED BY:	CMQ

PREPARED BY:

ALLEN & MAJOR ASSOCIATES, INC.
civil engineering ◆ land surveying
environmental consulting ◆ landscape architecture
www.allenmajor.com
100 COMMERCE WAY, SUITE 5
WOBURN MA 01801
TEL: (781) 935-6889
FAX: (781) 935-2896
WOBURN, MA ◆ LAKEVILLE, MA ◆ MANCHESTER, NH

THIS DRAWING HAS BEEN PREPARED IN DIGITAL FORMAT. CLIENT/CLIENT'S REPRESENTATIVE OR CONSULTANTS MAY BE PROVIDED COPIES OF DRAWINGS AND SPECIFICATIONS FOR HIS/HER INFORMATION AND/OR SPECIFIC USE ON THIS PROJECT. DUE TO THE POTENTIAL THAT THE PROVIDED INFORMATION MAY BE MODIFIED UNINTENTIONALLY OR OTHERWISE, ALLEN & MAJOR ASSOCIATES, INC. MAY REMOVE ALL INDICATION OF THE DOCUMENT'S AUTHORSHIP ON THE DIGITAL MEDIA. PRINTED REPRESENTATIONS OR PORTABLE DOCUMENT FORMAT OF THE DRAWINGS AND SPECIFICATIONS ISSUED SHALL BE THE ONLY RECORD COPIES OF ALLEN & MAJOR ASSOCIATES, INC.'S WORK PRODUCT.

DRAWING TITLE: EROSION CONTROL PLAN

SHEET No. C-101

Copyright©2024 Allen & Major Associates, Inc.
All Rights Reserved

NOTES:

1. THE LOCATIONS OF EXISTING UNDERGROUND UTILITIES ARE SHOWN IN AN APPROXIMATE WAY ONLY AND HAVE NOT BEEN INDEPENDENTLY VERIFIED BY THE OWNER OR ITS REPRESENTATIVE. THE CONTRACTOR SHALL DETERMINE THE EXACT LOCATION OF ALL EXISTING UTILITIES BEFORE COMMENCING WORK, AND AGREES TO BE FULLY RESPONSIBLE FOR ANY AND ALL DAMAGES WHICH MIGHT BE OCCASIONED BY THE CONTRACTOR'S FAILURE TO EXACTLY LOCATE AND PRESERVE ANY AND ALL UNDERGROUND UTILITIES.

2. THE INFORMATION SHOWN ON THIS PLAN IS THE SOLE PROPERTY OF ALLEN & MAJOR ASSOCIATES, INC. ITS INTENDED USE IS TO PROVIDE INFORMATION. ANY ALTERATION, MISUSE, OR RECALCULATION OF INFORMATION OR DATA WITHOUT THE EXPRESSED, WRITTEN CONSENT OF ALLEN & MAJOR ASSOCIATES, INC. IS STRICTLY PROHIBITED.

3. THE CONTRACTOR SHALL CONTACT "DIGSAFE" AND THE TOWN OF STONEHAM DEPARTMENT OF PUBLIC WORKS AT LEAST 72 HOURS PRIOR TO ANY EXCAVATION WORK TO REQUEST THE LOCATION OF THE EXISTING UTILITIES.

   DIGSAFE: 1-800-344-7233
   STONEHAM DEPT. OF PUBLIC WORKS: 1-781-438-0760

4. SEE THE ABBREVIATIONS AND NOTES PLAN, SHEET C-001 FOR EROSION CONTROL NOTES.

5. DURING BUILDING DEMOLITION, CONTRACTOR TO VIDEO ALL SANITARY SEWER BUILDING EXITS TO THEIR TERMINUS. CONTRACTOR TO CUT AND CAP ALL ACTIVE CONNECTIONS AT THE MAIN THAT ARE NOT BEING RE-USED.

6. ALTHOUGH CERTAIN ITEMS HAVE BEEN NOTED ON THIS DRAWING FOR DEMOLITION, NO ATTEMPT HAS BEEN MADE TO DELINEATE EACH AND EVERY ITEM THAT REQUIRES DEMOLITION FOR THE COMPLETION OF THE PROJECT. THE CONTRACTOR WILL BE RESPONSIBLE FOR ALL NECESSARY DEMOLITION WORK TO COMPLETE THE PROJECT. ALLEN & MAJOR ASSOCIATES, INC. IS NOT RESPONSIBLE FOR SITE DEMOLITION ITEMS NOT SHOWN ON THE SURVEY, OR SPECIFICALLY NOTED. THE DEMOLITION NOTES AND ARROWS ON THIS PLAN ARE TYPICAL AND DO NOT REFLECT QUANTITY.

7. ABATEMENT TO BE PROVIDED BY CONTRACTOR FOR EXISTING HOSPITAL BUILDING DEMOLITION.

8. BASE PLAN TAKEN FROM PLAN ENTITLED "EXISTING CONDITIONS – V-101" PREPARED BY ALLEN & MAJOR ASSOCIATES, DATED SEPTEMBER 8, 2023, AND REVISED THROUGH APRIL 25, 2024, ORIGINAL SCALE 1"=40' VIA ON-THE-GROUND SURVEY.

LIMIT OF DISTURBANCE	
LIMIT OF 'CLEAR AND GRUB'	
BUILDING TO BE REMOVED	
PAVEMENT TO BE REMOVED	
UTILITY CUT AND CAP	
TEMPORARY FENCE	—x—x—

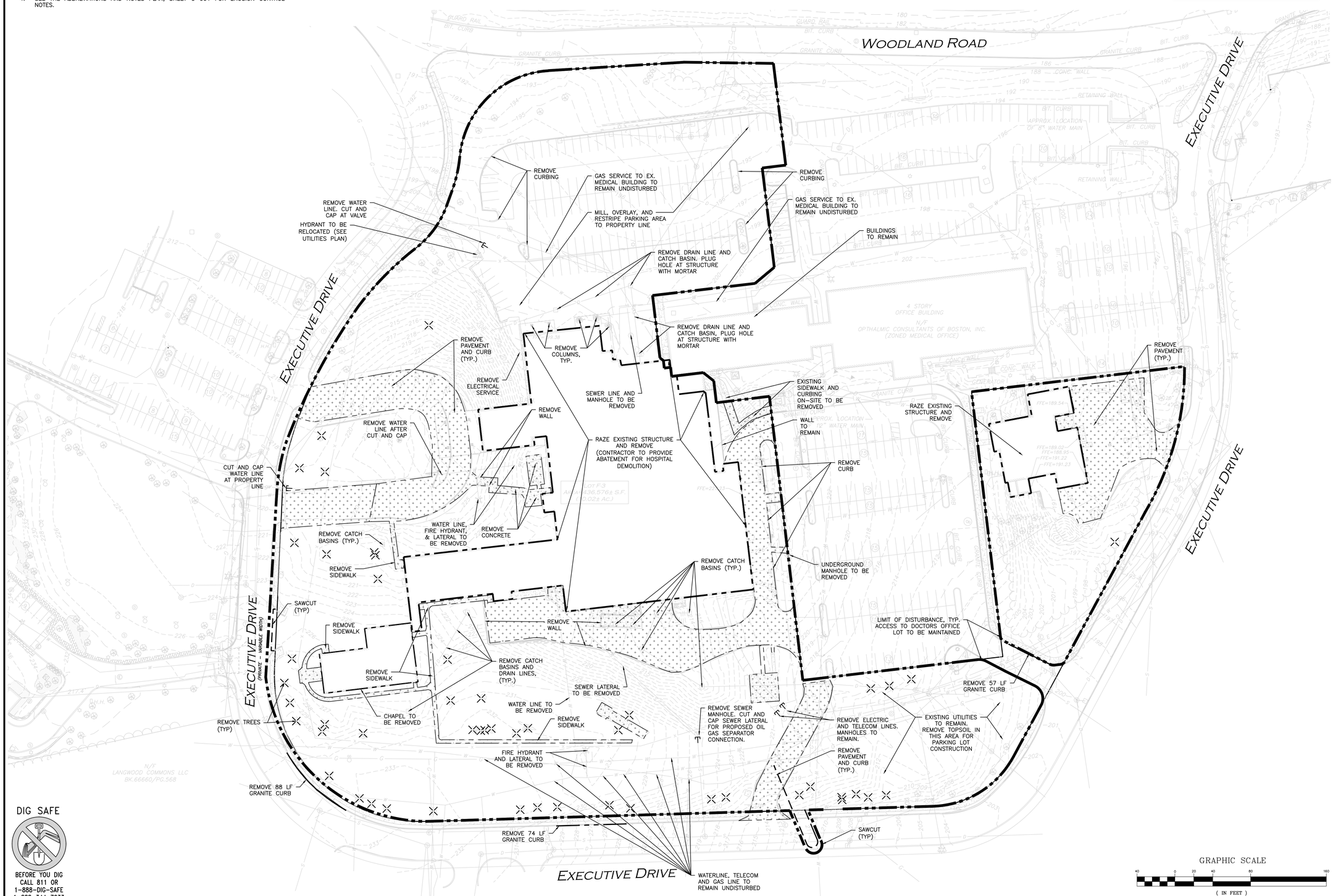

DIG SAFE

BEFORE YOU DIG
CALL 811 OR
1-888-DIG-SAFE
1-888-344-7233

N:\PROJECTS\1145-01T\CIVIL\DRAWINGS\CURRENT\C-1145-01T – SITE-PREP.DWG

ISSUED FOR PERMITTING - NOT FOR CONSTRUCTION

COMMONWEALTH OF MASSACHUSETTS
CARLTON M. QUINN
CIVIL
No. 49923
REGISTERED PROFESSIONAL ENGINEER
4.30.24

PROFESSIONAL ENGINEER FOR
ALLEN & MAJOR ASSOCIATES, INC.

REV	DATE	DESCRIPTION
1	2024-04-30	REVISED PER PEER REVIEW COMMENTS

APPLICANT\OWNER:
FELLSWAY DEVELOPMENT LLC
c/o THE GUTIERREZ CO.
200 SUMMIT DRIVE, SUITE 400
BURLINGTON, MA 01803

PROJECT:
THE RESIDENCES AT SPOT POND
MULTI-FAMILY HOUSING
5 WOODLAND ROAD
STONEHAM, MA 02180

PROJECT NO.	1145-01T	DATE:	2023-11-16
SCALE:	1"=40'	DWG. NAME:	C-1145-01T
DESIGNED BY:	DMR/MTB	CHECKED BY:	CMQ

PREPARED BY:

ALLEN & MAJOR ASSOCIATES, INC.
civil engineering ◆ land surveying
environmental consulting ◆ landscape architecture
www.allenmajor.com
100 COMMERCE WAY, SUITE 5
WOBURN MA 01801
TEL: (781) 935-6889
FAX: (781) 935-2896
WOBURN, MA ◆ LAKEVILLE, MA ◆ MANCHESTER, NH

THIS DRAWING HAS BEEN PREPARED IN DIGITAL FORMAT. CLIENT/CLIENT'S REPRESENTATIVE OR CONSULTANTS MAY BE PROVIDED COPIES OF DRAWINGS AND SPECIFICATIONS FOR HIS/HER INFORMATION AND/OR SPECIFIC USE ON THIS PROJECT. DUE TO THE POTENTIAL THAT THE PROVIDED INFORMATION MAY BE MODIFIED UNINTENTIONALLY OR OTHERWISE, ALLEN & MAJOR ASSOCIATES, INC. MAY REMOVE ALL INDICATION OF THE DOCUMENTS AUTHORSHIP ON THE DIGITAL MEDIA. PRINTED REPRESENTATIONS OR PORTABLE DOCUMENT FORMAT OF THE DRAWINGS AND SPECIFICATIONS ISSUED SHALL BE THE ONLY RECORD COPIES OF ALLEN & MAJOR ASSOCIATES, INC.'S WORK PRODUCT.

DRAWING TITLE:
SITE PREPARATION & DEMOLITION PLAN

SHEET No.
C-102

Copyright©2024 Allen & Major Associates, Inc.
All Rights Reserved

LOT F-3 - OFF-STREET PARKING SUMMARY

TOWN OF STONEHAM ZONING BYLAWS – SECTION 6.3 – OFF STREET PARKING ZONING SUMMARY
USE: RESIDENTIAL – GREATER THAN TWO FAMILY (PER SECTION 6.3.3)
1.7 SPACES PER DWELLING UNIT, ANY SPACE IN EXCESS OF THE REQUIREMENT SHALL NOT BE ASSIGNED, CONVEYED OR TRANSFERRED AND SHALL BE CLEARLY MARKED FOR VISITOR OR GUEST PARKING.
378 UNITS * 1.7 =643
SITE TOTAL OFF-STREET PARKING REQUIREMENT = 643

PROVIDED:
298 STANDARD NON EV ON-SITE SURFACE STALLS
3 PARALLEL SURFACE STALLS
90 ELECTRIC VEHICLE (EV) EXTERIOR SURFACE STALLS, 38 WITHIN BLDG B, TOTAL 128
59 EXISTING DEEDED SURFACE STALLS AT LIFE CARE CENTER
155 SPACES WITHIN LIMITS OF BUILDING "B" INCLUDING 6 HANDICAPPED AND 38 INTERIOR EV
29 GARAGE STALLS
9 EXTERIOR ADA SURFACE STALLS
643 TOTAL STALLS PROVIDED (1.70 RATIO AT 378 UNITS)

ACCESSIBLE PARKING SUMMARY
REQUIRED: FOR 501-1000 SPACES, 2% OF TOTAL PARKING SPACES SHALL BE ACCESSIBLE
(MINIMUM OF 2 ACCESSIBLE STALL SHALL BE VAN ACCESSIBLE)
643 PARKING SPACES * 2% = 13 REQUIRED ADA PARKING SPACES
PROVIDED: 15 TOTAL ACCESSIBLE PARKING STALLS INCLUDING 8 VAN ACCESSIBLE STALLS

GARAGE	STANDARD (9' x 18')	PARALLEL (9' x 22')	ACCESSIBLE	BLDG "B"	REQUIRED/ PROVIDED
29	447*	3	15	149**	643 / 643

*INCLUDES 90 EV SURFACE STALLS AND 59 EXISTING SURFACE STALLS
**EXCLUDES (6) HANDICAPPED STALLS WITHIN BUILDING B PARKING, OF WHICH (4) ARE VAN ACCESSIBLE, AND INCLUDES 38 ELECTRIC VEHICLE (EV) STALLS WITHIN BUILDING B PARKING AREA.

5 WOODLAND ROAD - LAND USEAGE TABLE
ZONING DISTRICT: MEDICAL/OFFICE/RESIDENTIAL

PROPOSED USE: RESIDENTIAL GARDEN APARTMENTS (ALLOWED AS OF RIGHT)

ITEM	REQUIRED	EXISTING	PROPOSED
LOT AREA (MIN)	200,000 S.F.	436,576 S.F.	436,576 S.F.
FRONTAGE & LOT WIDTH (MIN)	150'	2,090'±	2,090'±
PERCENT COVERAGE (MAX)(1)	30%	15.6%	31.1%±
BUILDING FRONT YARD SETBACK (MIN)(2)	30'	46.5'	30.1'± (PRINCIPAL) 11.0'± (ACCESSORY)
BUILDING SIDE YARD SETBACK (MIN)(2)(3)	10'	68.9'	28.2'±
BUILDING REAR YARD SETBACK (MIN)(2)(3)	10'	0'	16.7'±
BUILDING HEIGHT (MAX)	65'	97'±	65'±
PARKING SETBACK FROM WOODLAND RD. (MIN)	10'	53.2'±	53.2'±

ZONING NOTES:
1) PORTION OF LOT DEVOTED TO STRUCTURE. ONLY PRINCIPAL LOT F-3 (MAP 27 LOT 3) WAS ANALYZED.
2) RETAINING WALLS OVER FOUR (4') FEET IN HEIGHT ARE PERMITTED WITHIN THE REQUIRED FRONT, SIDE, AND REAR SETBACKS IN THE MEDICAL/OFFICE/RESIDENTIAL DISTRICT.
3) MINIMUM SPACE BETWEEN PRINCIPAL BUILDINGS ON THE SAME LOT IS TEN (10') FEET.

NOTES:
1. ANY ALTERATION, MISUSE, OR RECALCULATION OF THE INFORMATION OR DATA CONTAINED IN THIS PLAN WITHOUT THE EXPRESSED, WRITTEN CONSENT OF ALLEN & MAJOR ASSOCIATES, INC. IS STRICTLY PROHIBITED.
2. BASE PLAN TAKEN FROM PLAN ENTITLED "EXISTING CONDITIONS – V-101" PREPARED BY ALLEN & MAJOR ASSOCIATES, DATED SEPTEMBER 8, 2023, AND REVISED THROUGH APRIL 25, 2024, ORIGINAL SCALE 1"=40'.
3. THE LOCATIONS OF EXISTING UNDERGROUND UTILITIES ARE SHOWN IN AN APPROXIMATE WAY ONLY AND HAVE NOT BEEN INDEPENDENTLY VERIFIED BY THE OWNER OR IT'S REPRESENTATIVE. THE CONTRACTOR SHALL DETERMINE THE EXACT LOCATION OF ALL EXISTING UTILITIES BEFORE COMMENCING WORK, AND AGREES TO BE FULLY RESPONSIBLE FOR ANY AND ALL DAMAGES WHICH MIGHT BE OCCASIONED BY THE CONTRACTOR'S FAILURE TO EXACTLY LOCATE AND PRESERVE ANY AND ALL UNDERGROUND UTILITIES.
4. THE INFORMATION SHOWN ON THIS PLAN IS THE SOLE PROPERTY OF ALLEN & MAJOR ASSOCIATES, INC. IT'S INTENDED USE IS TO PROVIDE INFORMATION. ANY ALTERATION, MISUSE, OR RECALCULATION OF INFORMATION OR DATA WITHOUT THE EXPRESSED, WRITTEN CONSENT OF ALLEN & MAJOR ASSOCIATES, INC. IS STRICTLY PROHIBITED.
5. PROPOSED SIDEWALKS ARE TO BE CEMENT CONCRETE. ALL CURBS ARE TO BE PRECAST CONCRETE CURB (PCC) AND ALL CURB RADII WILL BE 3' UNLESS OTHERWISE NOTED.
6. ALL SPACES MARKED "EV" ARE TO BE EV READY, EV READY SPACES MAY OR MAY NOT BE RESTRICTED TO EV USE ONLY.

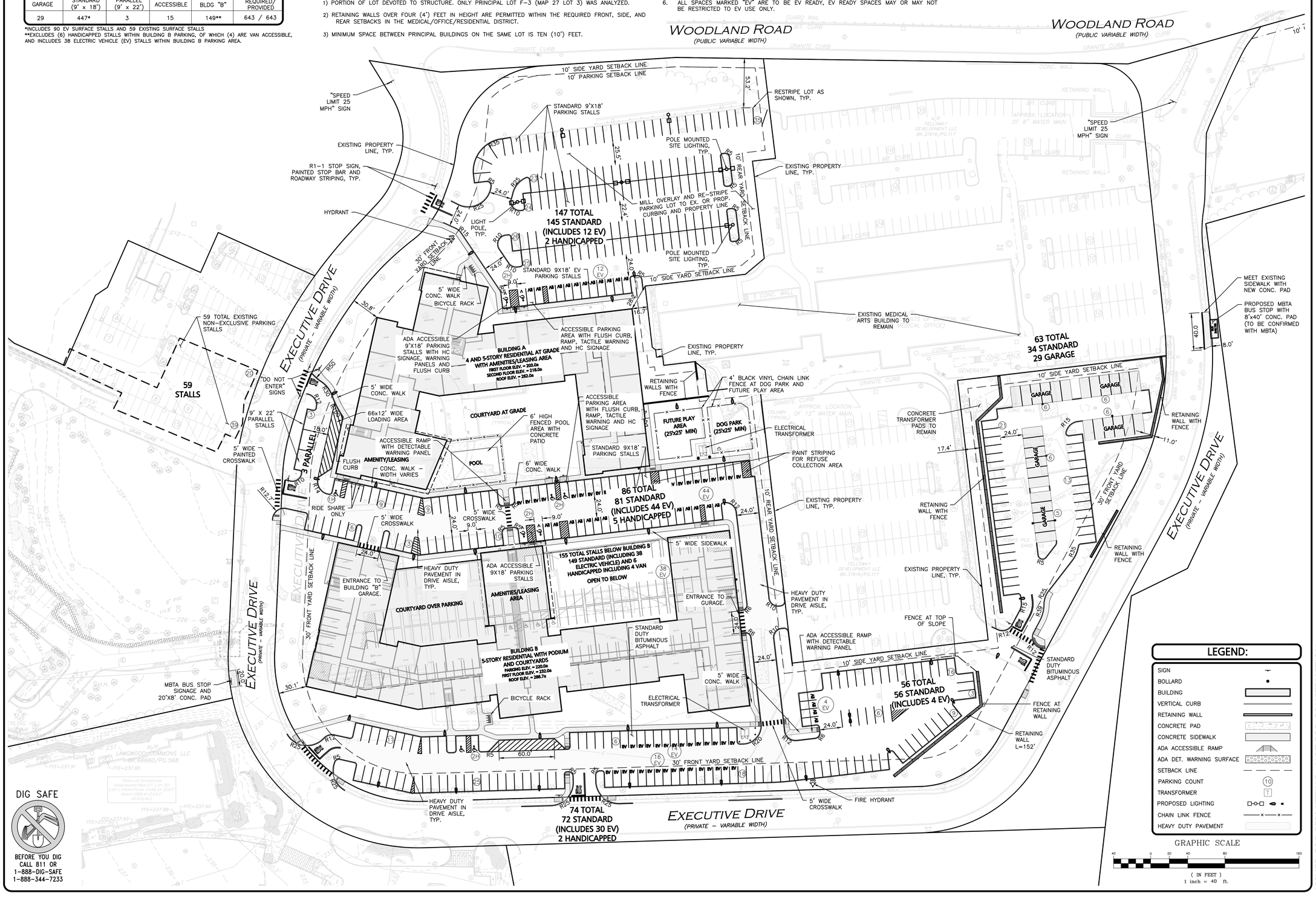

LEGEND:

SIGN
BOLLARD
BUILDING
VERTICAL CURB
RETAINING WALL
CONCRETE PAD
CONCRETE SIDEWALK
ADA ACCESSIBLE RAMP
ADA DET. WARNING SURFACE
SETBACK LINE
PARKING COUNT
TRANSFORMER
PROPOSED LIGHTING
CHAIN LINK FENCE
HEAVY DUTY PAVEMENT

GRAPHIC SCALE
(IN FEET)
1 inch = 40 ft.

DIG SAFE
BEFORE YOU DIG CALL 811 OR 1-888-DIG-SAFE 1-888-344-7233

N:\PROJECTS\1145-011\CIVIL\DRAWINGS\CURRENT\C-1145-011 - LAYOUT & MATERIALS.DWG

PROFESSIONAL ENGINEER FOR ALLEN & MAJOR ASSOCIATES, INC.

REV	DATE	DESCRIPTION
1	2024-04-30	REVISED PER PEER REVIEW COMMENTS

APPLICANT\OWNER:
FELLSWAY DEVELOPMENT LLC
c/o THE GUTIERREZ CO.
200 SUMMIT DRIVE, SUITE 400
BURLINGTON, MA 01803

PROJECT:
THE RESIDENCES AT SPOT POND
MULTI-FAMILY HOUSING
5 WOODLAND ROAD
STONEHAM, MA 02180

PROJECT NO.	1145-01T	DATE:	2023-11-16
SCALE:	1"=40'	DWG. NAME:	C-1145-01T
DESIGNED BY:	DMR/MTB	CHECKED BY:	CMQ

PREPARED BY:
ALLEN & MAJOR ASSOCIATES, INC.
civil engineering ◆ land surveying
environmental consulting ◆ landscape architecture
www.allenmajor.com
100 COMMERCE WAY, SUITE 5
WOBURN MA 01801
TEL: (781) 935-6889
FAX: (781) 935-2896
WOBURN, MA ◆ LAKEVILLE, MA ◆ MANCHESTER, NH

THIS DRAWING HAS BEEN PREPARED IN DIGITAL FORMAT. CLIENT/CLIENT'S REPRESENTATIVE OR CONSULTANTS MAY BE PROVIDED COPIES OF DRAWINGS AND SPECIFICATIONS FOR HIS/HER INFORMATION AND/OR SPECIFIC USE ON THIS PROJECT. DUE TO THE POTENTIAL THAT THE PROVIDED INFORMATION MAY BE MODIFIED UNINTENTIONALLY OR OTHERWISE, ALLEN & MAJOR ASSOCIATES, INC. MAY REMOVE ALL INDICATION OF THE DOCUMENTS AUTHORSHIP ON THE DIGITAL MEDIA. PRINTED REPRESENTATIONS OR PORTABLE DOCUMENT FORMAT OF THE DRAWINGS AND SPECIFICATIONS ISSUED SHALL BE THE ONLY RECORD COPIES OF ALLEN & MAJOR ASSOCIATES, INC.'S WORK PRODUCT.

DRAWING TITLE: LAYOUT & MATERIALS PLAN
SHEET No. C-103

Copyright©2024 Allen & Major Associates, Inc.
All Rights Reserved

ISSUED FOR PERMITTING - NOT FOR CONSTRUCTION

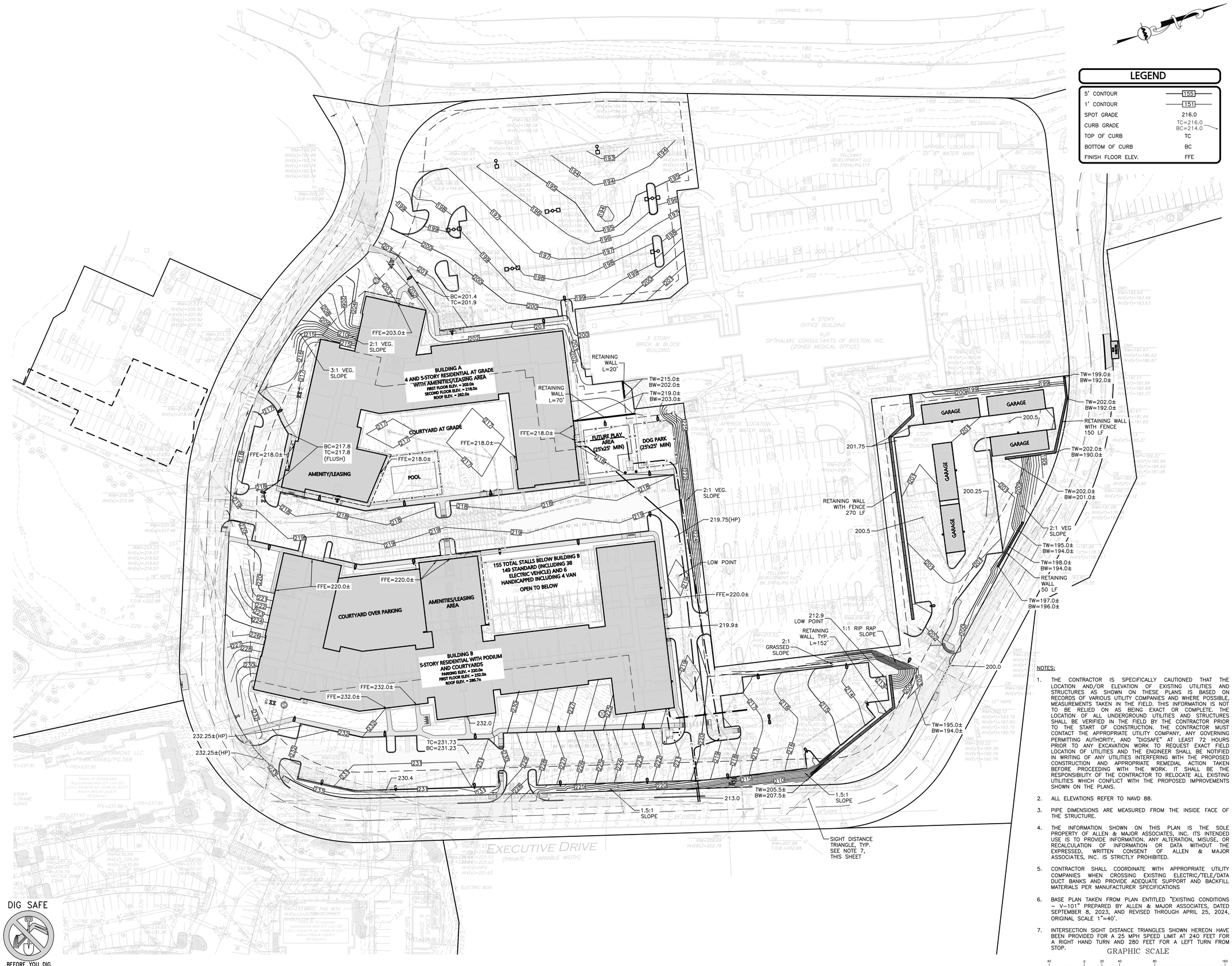

LEGEND

5' CONTOUR	155
1' CONTOUR	151
SPOT GRADE	216.0
CURB GRADE	TC=216.0 BC=214.0
TOP OF CURB	TC
BOTTOM OF CURB	BC
FINISH FLOOR ELEV.	FFE

NOTES:

1. THE CONTRACTOR IS SPECIFICALLY CAUTIONED THAT THE LOCATION AND/OR ELEVATION OF EXISTING UTILITIES AND STRUCTURES AS SHOWN ON THESE PLANS IS BASED ON RECORDS OF VARIOUS UTILITY COMPANIES AND WHERE POSSIBLE, MEASUREMENTS TAKEN IN THE FIELD. THIS INFORMATION IS NOT TO BE RELIED ON AS BEING EXACT OR COMPLETE. THE LOCATION OF ALL UNDERGROUND UTILITIES AND STRUCTURES SHALL BE VERIFIED IN THE FIELD BY THE CONTRACTOR PRIOR TO THE START OF CONSTRUCTION. THE CONTRACTOR MUST CONTACT THE APPROPRIATE UTILITY COMPANY, ANY GOVERNING PERMITTING AUTHORITY, AND "DIGSAFE" AT LEAST 72 HOURS PRIOR TO ANY EXCAVATION WORK TO REQUEST EXACT FIELD LOCATION OF UTILITIES AND THE ENGINEER SHALL BE NOTIFIED IN WRITING OF ANY UTILITIES INTERFERING WITH THE PROPOSED CONSTRUCTION AND APPROPRIATE REMEDIAL ACTION TAKEN BEFORE PROCEEDING WITH THE WORK. IT SHALL BE THE RESPONSIBILITY OF THE CONTRACTOR TO RELOCATE ALL EXISTING UTILITIES WHICH CONFLICT WITH THE PROPOSED IMPROVEMENTS SHOWN ON THE PLANS.
2. ALL ELEVATIONS REFER TO NAVD 88.
3. PIPE DIMENSIONS ARE MEASURED FROM THE INSIDE FACE OF THE STRUCTURE.
4. THE INFORMATION SHOWN ON THIS PLAN IS THE SOLE PROPERTY OF ALLEN & MAJOR ASSOCIATES, INC. ITS INTENDED USE IS TO PROVIDE INFORMATION. ANY ALTERATION, MISUSE, OR RECALCULATION OF INFORMATION OR DATA WITHOUT THE EXPRESSED, WRITTEN CONSENT OF ALLEN & MAJOR ASSOCIATES, INC. IS STRICTLY PROHIBITED.
5. CONTRACTOR SHALL COORDINATE WITH APPROPRIATE UTILITY COMPANIES WHEN CROSSING EXISTING ELECTRIC/TELE/DATA DUCT BANKS AND PROVIDE ADEQUATE SUPPORT AND BACKFILL MATERIALS PER MANUFACTURER SPECIFICATIONS
6. BASE PLAN TAKEN FROM PLAN ENTITLED "EXISTING CONDITIONS – V–101" PREPARED BY ALLEN & MAJOR ASSOCIATES, DATED SEPTEMBER 8, 2023, AND REVISED THROUGH APRIL 25, 2024, ORIGINAL SCALE 1"=40'.
7. INTERSECTION SIGHT DISTANCE TRIANGLES SHOWN HEREON HAVE BEEN PROVIDED FOR A 25 MPH SPEED LIMIT AT 240 FEET FOR A RIGHT HAND TURN AND 280 FEET FOR A LEFT TURN FROM STOP.

GRAPHIC SCALE

40 0 20 40 80 160

(IN FEET)
1 inch = 40 ft.

COMMONWEALTH OF MASSACHUSETTS
CARLTON M. QUINN
CIVIL
No. 49923
REGISTERED PROFESSIONAL ENGINEER
4.30.24

PROFESSIONAL ENGINEER FOR ALLEN & MAJOR ASSOCIATES, INC.

REV	DATE	DESCRIPTION
1	2024-04-30	REVISED PER PEER REVIEW COMMENTS

APPLICANT\OWNER:
FELLSWAY DEVELOPMENT LLC
c/o THE GUTIERREZ CO.
200 SUMMIT DRIVE, SUITE 400
BURLINGTON, MA 01803

PROJECT:
THE RESIDENCES AT SPOT POND
MULTI-FAMILY HOUSING
5 WOODLAND ROAD
STONEHAM, MA 02180

PROJECT NO.	1145-01T	DATE:	2023-11-16
SCALE:	1"=40'	DWG. NAME:	C-1145-01T
DESIGNED BY:	DMR/MTB	CHECKED BY:	CMQ

PREPARED BY:

ALLEN & MAJOR ASSOCIATES, INC.
civil engineering ◆ land surveying
environmental consulting ◆ landscape architecture
www.allenmajor.com
100 COMMERCE WAY, SUITE 5
WOBURN MA 01801
TEL: (781) 935-6889
FAX: (781) 935-2896

WOBURN, MA ◆ LAKEVILLE, MA ◆ MANCHESTER, NH

THIS DRAWING HAS BEEN PREPARED IN DIGITAL FORMAT. CLIENT/CLIENT'S REPRESENTATIVE OR CONSULTANTS MAY BE PROVIDED COPIES OF DRAWINGS AND SPECIFICATIONS FOR HIS/HER INFORMATION AND/OR SPECIFIC USE ON THIS PROJECT. DUE TO THE POTENTIAL THAT THE PROVIDED INFORMATION MAY BE MODIFIED UNINTENTIONALLY OR OTHERWISE, ALLEN & MAJOR ASSOCIATES, INC. MAY REMOVE ALL INDICATION OF THE DOCUMENTS AUTHORSHIP ON THE DIGITAL MEDIA. PRINTED REPRESENTATIONS OR PORTABLE DOCUMENT FORMAT OF THE DRAWINGS AND SPECIFICATIONS ISSUED SHALL BE THE ONLY RECORD COPIES OF ALLEN & MAJOR ASSOCIATES, INC.'S WORK PRODUCT.

DRAWING TITLE:
GRADING & SPOT GRADES PLAN

SHEET No.
C-104

Copyright©2024 Allen & Major Associates, Inc.
All Rights Reserved

ISSUED FOR PERMITTING - NOT FOR CONSTRUCTION

N:\PROJECTS\1145-01T\CIVIL\DRAWINGS\CURRENT\C-1145-01T_GRADING & SPOT GRADES.DWG

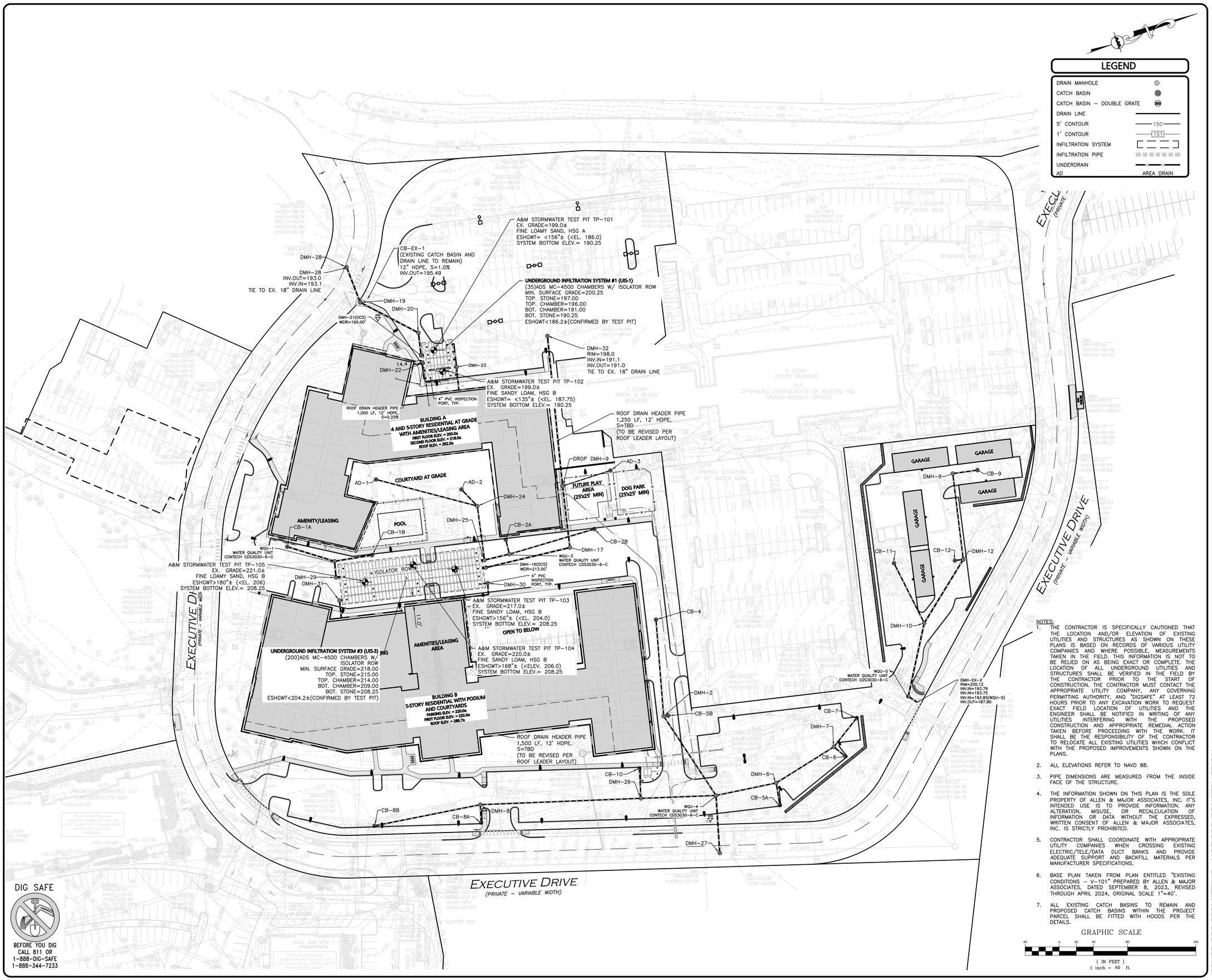

NOTES:

1. THE CONTRACTOR IS SPECIFICALLY CAUTIONED THAT THE LOCATION AND/OR ELEVATION OF EXISTING UTILITIES AND STRUCTURES AS SHOWN ON THESE PLANS IS BASED ON RECORDS OF VARIOUS UTILITY COMPANIES AND WHERE POSSIBLE, MEASUREMENTS TAKEN IN THE FIELD. THIS INFORMATION IS NOT TO BE RELIED ON AS BEING EXACT OR COMPLETE. THE LOCATION OF ALL UNDERGROUND UTILITIES AND STRUCTURES SHALL BE VERIFIED IN THE FIELD BY THE CONTRACTOR PRIOR TO THE START OF CONSTRUCTION. THE CONTRACTOR MUST CONTACT THE APPROPRIATE UTILITY COMPANY, ANY GOVERNING PERMITTING AUTHORITY, AND "DIGSAFE" AT LEAST 72 HOURS PRIOR TO ANY EXCAVATION WORK TO REQUEST EXACT FIELD LOCATION OF UTILITIES AND THE ENGINEER SHALL BE NOTIFIED IN WRITING OF ANY UTILITIES INTERFERING WITH THE PROPOSED CONSTRUCTION AND APPROPRIATE REMEDIAL ACTION TAKEN BEFORE PROCEEDING WITH THE WORK. IT SHALL BE THE RESPONSIBILITY OF THE CONTRACTOR TO RELOCATE ALL EXISTING UTILITIES WHICH CONFLICT WITH THE PROPOSED IMPROVEMENTS SHOWN ON THE PLANS.
2. ALL ELEVATIONS REFER TO NAVD 88.
3. PIPE DIMENSIONS ARE MEASURED FROM THE INSIDE FACE OF THE STRUCTURE.
4. THE INFORMATION SHOWN ON THIS PLAN IS THE SOLE PROPERTY OF ALLEN & MAJOR ASSOCIATES, INC. IT'S INTENDED USE IS TO PROVIDE INFORMATION. ANY ALTERATION, MISUSE, OR RECALCULATION OF INFORMATION OR DATA WITHOUT THE EXPRESSED, WRITTEN CONSENT OF ALLEN & MAJOR ASSOCIATES, INC. IS STRICTLY PROHIBITED.
5. CONTRACTOR SHALL COORDINATE WITH APPROPRIATE UTILITY COMPANIES WHEN CROSSING EXISTING ELECTRIC/TELE/DATA DUCT BANKS AND PROVIDE ADEQUATE SUPPORT AND BACKFILL MATERIALS PER MANUFACTURER SPECIFICATIONS.
6. BASE PLAN TAKEN FROM PLAN ENTITLED "EXISTING CONDITIONS – V–101" PREPARED BY ALLEN & MAJOR ASSOCIATES, DATED SEPTEMBER 8, 2023, REVISED THROUGH APRIL 2024, ORIGINAL SCALE 1"=40'.
7. ALL EXISTING CATCH BASINS TO REMAIN AND PROPOSED CATCH BASINS WITHIN THE PROJECT PARCEL SHALL BE FITTED WITH HOODS PER THE DETAILS.

GRAPHIC SCALE

40 0 20 40 80 160

(IN FEET)
1 inch = 40 ft.

COMMONWEALTH OF MASSACHUSETTS
4.30.24
CARLTON M. QUINN
CIVIL
No. 49923
REGISTERED PROFESSIONAL ENGINEER

PROFESSIONAL ENGINEER FOR
ALLEN & MAJOR ASSOCIATES, INC.

REV	DATE	DESCRIPTION
1	2024-04-30	REVISED PER PEER REVIEW COMMENTS

APPLICANT\OWNER:
FELLSWAY DEVELOPMENT LLC
c/o THE GUTIERREZ CO.
200 SUMMIT DRIVE, SUITE 400
BURLINGTON, MA 01803

PROJECT:
THE RESIDENCES AT SPOT POND
MULTI-FAMILY HOUSING
5 WOODLAND ROAD
STONEHAM, MA 02180

PROJECT NO.	1145-01T	DATE:	2023-11-16
SCALE:	1"=40'	DWG. NAME:	C-1145-01T
DESIGNED BY:	DMR/MTB	CHECKED BY:	CMQ

PREPARED BY:

ALLEN & MAJOR ASSOCIATES, INC.
civil engineering ◆ land surveying
environmental consulting ◆ landscape architecture
www.allenmajor.com
100 COMMERCE WAY, SUITE 5
WOBURN MA 01801
TEL: (781) 935-6889
FAX: (781) 935-2896
WOBURN, MA ◆ LAKEVILLE, MA ◆ MANCHESTER, NH

THIS DRAWING HAS BEEN PREPARED IN DIGITAL FORMAT. CLIENT/CLIENT'S REPRESENTATIVE OR CONSULTANTS MAY BE PROVIDED COPIES OF DRAWINGS AND SPECIFICATIONS FOR HIS/HER INFORMATION AND/OR SPECIFIC USE ON THIS PROJECT. DUE TO THE POTENTIAL THAT THE PROVIDED INFORMATION MAY BE MODIFIED UNINTENTIONALLY OR OTHERWISE, ALLEN & MAJOR ASSOCIATES, INC. MAY REMOVE ALL INDICATION OF THE DOCUMENT'S AUTHORSHIP ON THE DIGITAL MEDIA. PRINTED REPRESENTATIONS OR PORTABLE DOCUMENT FORMAT OF THE DRAWINGS AND SPECIFICATIONS ISSUED SHALL BE THE ONLY RECORD COPIES OF ALLEN & MAJOR ASSOCIATES, INC.'S WORK PRODUCT.

DRAWING TITLE: DRAINAGE PLAN

SHEET No. C-105A

Copyright©2024 Allen & Major Associates, Inc.
All Rights Reserved

ISSUED FOR PERMITTING - NOT FOR CONSTRUCTION

N:\PROJECTS\1145-01T\DWG\DRAWINGS\CURRENT\C-1145-01T - DRAINAGE PLAN.DWG

DRAIN STRUCTURE TABLE

STRUCTURE	STRUCTURE DETAILS
AD-1	RIM = 216.7 INV OUT = 210.98 (DMH-24)
AD-2	RIM = 216.5 INV OUT = 210.03 (DMH-24)
AD-3	RIM = 217.0 INV OUT = 205.59 (DROP DMH-9)
CB-1A	RIM = 217.5 INV OUT = 210.02 (DMH-1(WQU))
CB-1B	RIM = 217.5 INV OUT = 209.89 (DMH-1(WQU))
CB-2A	RIM = 217.5 INV OUT = 210.20 (DMH-3(WQU))
CB-2B	RIM = 217.4 INV OUT = 212.44 (DMH-3(WQU))
CB-4	RIM = 218.7 INV OUT = 213.58 (DMH-2)
CB-5A	RIM = 215.6 INV OUT = 206.30 (DMH-6)
CB-5B	RIM = 218.7 INV OUT = 209.26 (DMH-2)
CB-6	RIM = 213.8 INV OUT = 208.07 (DMH-7)
CB-7	RIM = 212.5 INV OUT = 208.73 (DMH-7)
CB-8A	RIM = 230.0 INV OUT = 219.55 (DMH-8)
CB-8B	RIM = 230.4 INV OUT = 224.83 (DMH-8)

DRAIN STRUCTURE TABLE

STRUCTURE	STRUCTURE DETAILS
CB-9	RIM = 200.5 INV OUT = 197.13 (DMH-9)
CB-10	RIM = 221.6 INV OUT = 210.75 (DMH-26)
CB-11	RIM = 200.5 INV OUT = 195.75 (DMH-10)
CB-12	RIM = 200.2 INV OUT = 195.95 (DMH-12)
DMH-1(WQU)	RIM = 218.0 INV IN = 209.44 (CB-1B) INV IN = 209.44 (CB-1A) INV OUT = 209.44 (DMH-29)
DMH-2	RIM = 218.8 INV IN = 209.04 (CB-4) INV IN = 209.04 (CB-5B) INV OUT = 208.94 (DMH-4(WQU))
DMH-3(WQU)	RIM = 218.0 INV IN = 209.85 (CB-2B) INV IN = 209.85 (CB-2A) INV OUT = 209.75 (DMH-25)
DMH-4(WQU)	RIM = 217.8 INV IN = 204.49 (DMH-2) INV IN = 204.49 (DMH-6) INV IN = 204.49 (DMH-26) INV OUT = 204.48 (DMH-27)
DMH-5(WQU)	RIM = 201.3 INV IN = 194.08 (DMH-10) INV OUT = 193.98 (DMH-EX-2)
DMH-6	RIM = 215.8 INV IN = 206.03 (DMH-7) INV IN = 206.03 (CB-5A) INV OUT = 205.93 (DMH-4(WQU))
DMH-7	RIM = 213.9 INV IN = 207.72 (CB-7) INV IN = 207.72 (CB-6) INV OUT = 207.62 (DMH-6)
DMH-8	RIM = 230.3 INV IN = 218.50 (CB-8A) INV IN = 218.50 (CB-8B) INV OUT = 218.40 (DMH-26)
DMH-9	RIM = 200.8 INV IN = 196.87 (CB-9) INV OUT = 196.77 (DMH-12)
DMH-10	RIM = 200.9 INV IN = 194.97 (DMH-12) INV IN = 194.97 (CB-11) INV OUT = 194.87 (DMH-5(WQU))

DRAIN STRUCTURE TABLE

STRUCTURE	STRUCTURE DETAILS
DMH-12	RIM = 200.4 INV IN = 195.85 (DMH-9) INV IN = 195.85 (CB-12) INV OUT = 195.75 (DMH-10)
DMH-16(OCS)	RIM = 218.6 INV IN = 209.00 (IUS3-IN3 (1)) INV OUT = 208.90 (DMH-17)
DMH-17	RIM = 218.2 INV IN = 205.86 (DMH-16(OCS)) INV OUT = 205.76 (DROP DMH-9)
DMH-19	RIM = 201.7 INV IN = 193.64 (DMH-20) INV OUT = 193.54 (DMH-28)
DMH-20	RIM = 201.0 INV IN = 194.51 (DMH-21(OCS)) INV OUT = 194.41 (DMH-19)
DMH-21(OCS)	RIM = 201.5 INV IN = 191.00 (IUS1-OUT) INV OUT = 194.78 (DMH-20)
DMH-22	RIM = 201.7 INV IN = 191.00 (HEADER-2) INV OUT = 191.00 (IUS1-IN2)
DMH-23	RIM = 201.4 INV IN = 191.00 (HEADER-1) INV OUT = 191.00 (IUS1-IN1)
DMH-24	RIM = 217.0 INV IN = 209.76 (AD-1) INV IN = 209.76 (AD-2) INV OUT = 209.66 (DMH-25)
DMH-25	RIM = 218.3 INV IN = 209.00 (DMH-24) INV IN = 209.00 (DMH-3(WQU)) INV OUT = 209.00 (IUS3-IN2)
DMH-26	RIM = 221.9 INV IN = 208.99 (DMH-8) INV IN = 208.99 (CB-10) INV OUT = 208.89 (DMH-4(WQU))
DMH-27	RIM = 209.1 INV IN = 201.10 (DMH-4(WQU))
DMH-28	RIM = 199.9 INV IN = 193.10 (DMH-19)
DMH-29	RIM = 218.8 INV IN = 209.00 (DMH-1(WQU)) INV OUT = 209.00 (IUS3-IN1)

DRAIN STRUCTURE TABLE

STRUCTURE	STRUCTURE DETAILS
DMH-30	RIM = 219.3 INV IN = 209.00 (HEADER-3) INV OUT = 209.00 (IUS3-IN3)
DMH-31	RIM = 219.8 INV IN = 209.00 (HEADER-4) INV OUT = 209.00 (IUS3-IN4)
DMH-32	RIM = 198.2 INV IN = 191.10 (DROP DMH-9)
DROP DMH-9	RIM = 217.7 INV IN = 203.12 (DMH-17) INV IN = 203.20 (AD-3) INV OUT = 194.33 (DMH-32)

NOTES:

1. THE CONTRACTOR IS SPECIFICALLY CAUTIONED THAT THE LOCATION AND/OR ELEVATION OF EXISTING UTILITIES AND STRUCTURES AS SHOWN ON THESE PLANS IS BASED ON RECORDS OF VARIOUS UTILITY COMPANIES AND WHERE POSSIBLE, MEASUREMENTS TAKEN IN THE FIELD. THIS INFORMATION IS NOT TO BE RELIED ON AS BEING EXACT OR COMPLETE. THE LOCATION OF ALL UNDERGROUND UTILITIES AND STRUCTURES SHALL BE VERIFIED IN THE FIELD BY THE CONTRACTOR PRIOR TO THE START OF CONSTRUCTION. THE CONTRACTOR MUST CONTACT THE APPROPRIATE UTILITY COMPANY, ANY GOVERNING PERMITTING AUTHORITY, AND "DIGSAFE" AT LEAST 72 HOURS PRIOR TO ANY EXCAVATION WORK TO REQUEST EXACT FIELD LOCATION OF UTILITIES AND THE ENGINEER SHALL BE NOTIFIED IN WRITING OF ANY UTILITIES INTERFERING WITH THE PROPOSED CONSTRUCTION AND APPROPRIATE REMEDIAL ACTION TAKEN BEFORE PROCEEDING WITH THE WORK. IT SHALL BE THE RESPONSIBILITY OF THE CONTRACTOR TO RELOCATE ALL EXISTING UTILITIES WHICH CONFLICT WITH THE PROPOSED IMPROVEMENTS SHOWN ON THE PLANS.
2. ALL ELEVATIONS REFER TO NAVD 88.
3. PIPE DIMENSIONS ARE MEASURED FROM THE INSIDE FACE OF THE STRUCTURE.
4. THE INFORMATION SHOWN ON THIS PLAN IS THE SOLE PROPERTY OF ALLEN & MAJOR ASSOCIATES, INC. IT'S INTENDED USE IS TO PROVIDE INFORMATION. ANY ALTERATION, MISUSE, OR RECALCULATION OF INFORMATION OR DATA WITHOUT THE EXPRESSED, WRITTEN CONSENT OF ALLEN & MAJOR ASSOCIATES, INC. IS STRICTLY PROHIBITED.

DRAIN PIPE TABLE

PIPE SEGMENT	SIZE	LENGTH	SLOPE	MATERIAL
AD-1 – DMH-24	12"	122.57'	1.00%	HDPE
AD-2 – DMH-24	12"	26.94'	1.00%	HDPE
AD-3 – DROP DMH-9	8"	58.96'	4.05%	HDPE
CB-1A – DMH-1(WQU)	15"	57.96'	1.00%	HDPE
CB-1B – DMH-1(WQU)	15"	44.49'	1.00%	HDPE
CB-2A – DMH-3(WQU)	12"	17.48'	2.00%	HDPE
CB-2B – DMH-3(WQU)	12"	103.60'	2.50%	HDPE
CB-4 – DMH-2	12"	113.41'	4.00%	HDPE
CB-5A – DMH-6	12"	26.32'	1.00%	HDPE
CB-5B – DMH-2	12"	5.30'	4.00%	HDPE
CB-6 – DMH-7	12"	17.24'	2.00%	HDPE
CB-7 – DMH-7	12"	42.83'	2.34%	HDPE
CB-8A – DMH-8	12"	21.01'	5.00%	HDPE
CB-8B – DMH-8	12"	126.53'	5.00%	HDPE
CB-9 – DMH-9	12"	29.14'	0.90%	HDPE
CB-10 – DMH-26	12"	35.11'	5.00%	HDPE

DRAIN PIPE TABLE

PIPE SEGMENT	SIZE	LENGTH	SLOPE	MATERIAL
CB-11 – DMH-10	12"	78.51'	1.00%	HDPE
CB-12 – DMH-12	12"	9.77'	1.00%	HDPE
DMH-1(WQU) – DMH-29	15"	19.07'	2.31%	HDPE
DMH-2 – DMH-4(WQU)	12"	111.37'	4.00%	HDPE
DMH-3(WQU) – DMH-25	15"	29.97'	2.50%	HDPE
DMH-4(WQU) – DMH-27	15"	67.58'	5.00%	HDPE
DMH-5(WQU) – DMH-EX-2	15"	12.50'	1.00%	HDPE
DMH-6 – DMH-4(WQU)	12"	72.08'	2.00%	HDPE
DMH-7 – DMH-6	12"	79.66'	2.00%	HDPE
DMH-8 – DMH-26	12"	188.27'	5.00%	HDPE
DMH-9 – DMH-12	12"	101.35'	0.90%	HDPE
DMH-10 – DMH-5(WQU)	15"	87.86'	0.90%	HDPE
DMH-12 – DMH-10	15"	87.40'	0.90%	HDPE
DMH-16(OCS) – DMH-17	15"	101.37'	3.00%	HDPE
DMH-17 – DROP DMH-9	15"	72.63'	3.63%	HDPE
DMH-19 – DMH-28	15"	44.19'	1.00%	HDPE

DRAIN PIPE TABLE

PIPE SEGMENT	SIZE	LENGTH	SLOPE	MATERIAL
DMH-20 – DMH-19	15"	76.95'	1.00%	HDPE
DMH-21(OCS) – DMH-20	15"	26.91'	1.00%	HDPE
DMH-24 – DMH-25	12"	63.86'	1.03%	HDPE
DMH-26 – DMH-4(WQU)	12"	88.00'	5.00%	HDPE
DMH-30 – IUS3-IN3	12"	4.51'	0.00%	HDPE
DROP DMH-9 – DMH-32	15"	176.79'	1.83%	HDPE
HEADER-1 – DMH-23	12"	26.65'	1.00%	HDPE
HEADER-2 – DMH-22	12"	9.80'	1.53%	HDPE
HEADER-3 – DMH-30	15"	13.57'	1.47%	HDPE
HEADER-4 – DMH-31	15"	19.90'	1.00%	HDPE

COMMONWEALTH OF MASSACHUSETTS
CARLTON M. QUINN
CIVIL
No. 49923
REGISTERED PROFESSIONAL ENGINEER
2024.04.30 08:24:00 -04'00'

PROFESSIONAL ENGINEER FOR
ALLEN & MAJOR ASSOCIATES, INC.

REV	DATE	DESCRIPTION
1	2024-04-30	REVISED PER PEER REVIEW COMMENTS

APPLICANT\OWNER:
FELLSWAY DEVELOPMENT LLC
c/o THE GUTIERREZ CO.
200 SUMMIT DRIVE, SUITE 400
BURLINGTON, MA 01803

PROJECT:
THE RESIDENCES AT SPOT POND
MULTI-FAMILY HOUSING
5 WOODLAND ROAD
STONEHAM, MA 02180

PROJECT NO.	1145-01T	DATE:	2023-11-16
SCALE:	NTS	DWG. NAME:	C-1145-01T
DESIGNED BY:	DMR/MTB	CHECKED BY:	CMQ

PREPARED BY:
ALLEN & MAJOR ASSOCIATES, INC.
civil engineering ◆ land surveying
environmental consulting ◆ landscape architecture
www.allenmajor.com
100 COMMERCE WAY, SUITE 5
WOBURN MA 01801
TEL: (781) 935-6889
FAX: (781) 935-2896
WOBURN, MA ◆ LAKEVILLE, MA ◆ MANCHESTER, NH

THIS DRAWING HAS BEEN PREPARED IN DIGITAL FORMAT. CLIENT/CLIENT'S REPRESENTATIVE OR CONSULTANTS MAY BE PROVIDED COPIES OF DRAWINGS AND SPECIFICATIONS FOR HIS/HER INFORMATION AND/OR SPECIFIC USE ON THIS PROJECT. DUE TO THE POTENTIAL THAT THE PROVIDED INFORMATION MAY BE MODIFIED UNINTENTIONALLY OR OTHERWISE, ALLEN & MAJOR ASSOCIATES, INC. MAY REMOVE ALL INDICATION OF THE DOCUMENT'S AUTHORSHIP ON THE DIGITAL MEDIA. PRINTED REPRESENTATIONS OR PORTABLE DOCUMENT FORMAT OF THE DRAWINGS AND SPECIFICATIONS ISSUED SHALL BE THE ONLY RECORD COPIES OF ALLEN & MAJOR ASSOCIATES, INC.'S WORK PRODUCT.

DRAWING TITLE:
DRAINAGE PLAN

SHEET No.
C-105B

Copyright©2024 Allen & Major Associates, Inc.
All Rights Reserved

ISSUED FOR PERMITTING - NOT FOR CONSTRUCTION

N:\PROJECTS\1145-01T\CIVIL\DRAWINGS\DRFT\C-1145-01T - DRAINAGE PLAN.DWG

NOTES:

1. THE INFORMATION SHOWN ON THIS PLAN IS THE SOLE PROPERTY OF ALLEN & MAJOR ASSOCIATES, INC. ITS INTENDED USE IS TO PROVIDE INFORMATION. ANY ALTERATION, MISUSE, OR RECALCULATION OF INFORMATION OR DATA WITHOUT THE EXPRESSED, WRITTEN CONSENT OF ALLEN & MAJOR ASSOCIATES, INC. IS STRICTLY PROHIBITED.
2. THIS PLAN WAS PREPARED USING AVAILABLE SITE INFORMATION FROM SEVERAL SOURCES, SOME OF WHICH IS UNCONFIRMED. THE EXISTING CONDITIONS SURVEY BASE WAS TAKEN FROM A PLAN ENTITLED "EXISTING CONDITIONS – V–101" PREPARED BY ALLEN & MAJOR ASSOCIATES, INC. DATED SEPTEMBER 8, 2023 AND REVISED THROUGH APRIL 25, 2024, ORIGINAL SCALE 1"=40', AND WAS GATHERED FROM AN ON–THE–GROUND SURVEY.
3. THE LOCATIONS OF EXISTING UNDERGROUND UTILITIES ARE SHOWN IN AN APPROXIMATE WAY ONLY AND HAVE NOT BEEN INDEPENDENTLY VERIFIED BY THE OWNER OR IT'S REPRESENTATIVE. THE CONTRACTOR SHALL DETERMINE THE EXACT LOCATION OF ALL EXISTING UTILITIES BEFORE COMMENCING WORK, AND AGREES TO BE FULLY RESPONSIBLE FOR ANY AND ALL DAMAGES WHICH MIGHT BE OCCASIONED BY THE CONTRACTOR'S FAILURE TO EXACTLY LOCATE AND PRESERVE ANY AND ALL UNDERGROUND UTILITIES.
4. ALL ELEVATIONS REFER TO NAVD 88.
5. UTILITIES INCLUDING DOMESTIC WATER, FIRE PROTECTION WATER AND FIRE DEPT. DONNECITON, GAS, ELECTRICAL AND TELECOM LINES, SIZES, MATERIALS AND LOCATIONS ARE FOR COORDINATION PURPOSES ONLY AND SHALL BE CONFIRMED WITH ENGINEER FROM EACH APPLICABLE DISCIPLINE PRIOR TO CONSTRUCTION. ALL UTILITIES SHOWN ON THIS PLAN ARE FOR COORDINATION PURPOSES ONLY. INDIVIDUAL UTILITY PROVIDERS AND MEP ENGINEER SHALL DETERMINE THE FINAL LOCATION, SIZE AND MATERIAL OF EACH UTILITY.
6. MINIMUM 10' SEPARATION BETWEEN SEWER LINES AND WATER LINES SHALL BE MAINTAINED, AS SHOWN ON THE PLANS. WHERE LESS THAT 10' SEPARATION IS POSSIBLE, BOTH LINES SHALL BE ENCASED IN CONCRETE A MINIMUM OF 10' IN EACH DIRECTION, OR AS PRACTICABLE.
7. CONTRACTOR SHALL VERIFY IN FIELD (V.I.F.) ALL AFFECTED EXISTING UTILITIES LOCATION, SIZE AND MATERIALS, INCLUDING WATERLINES.

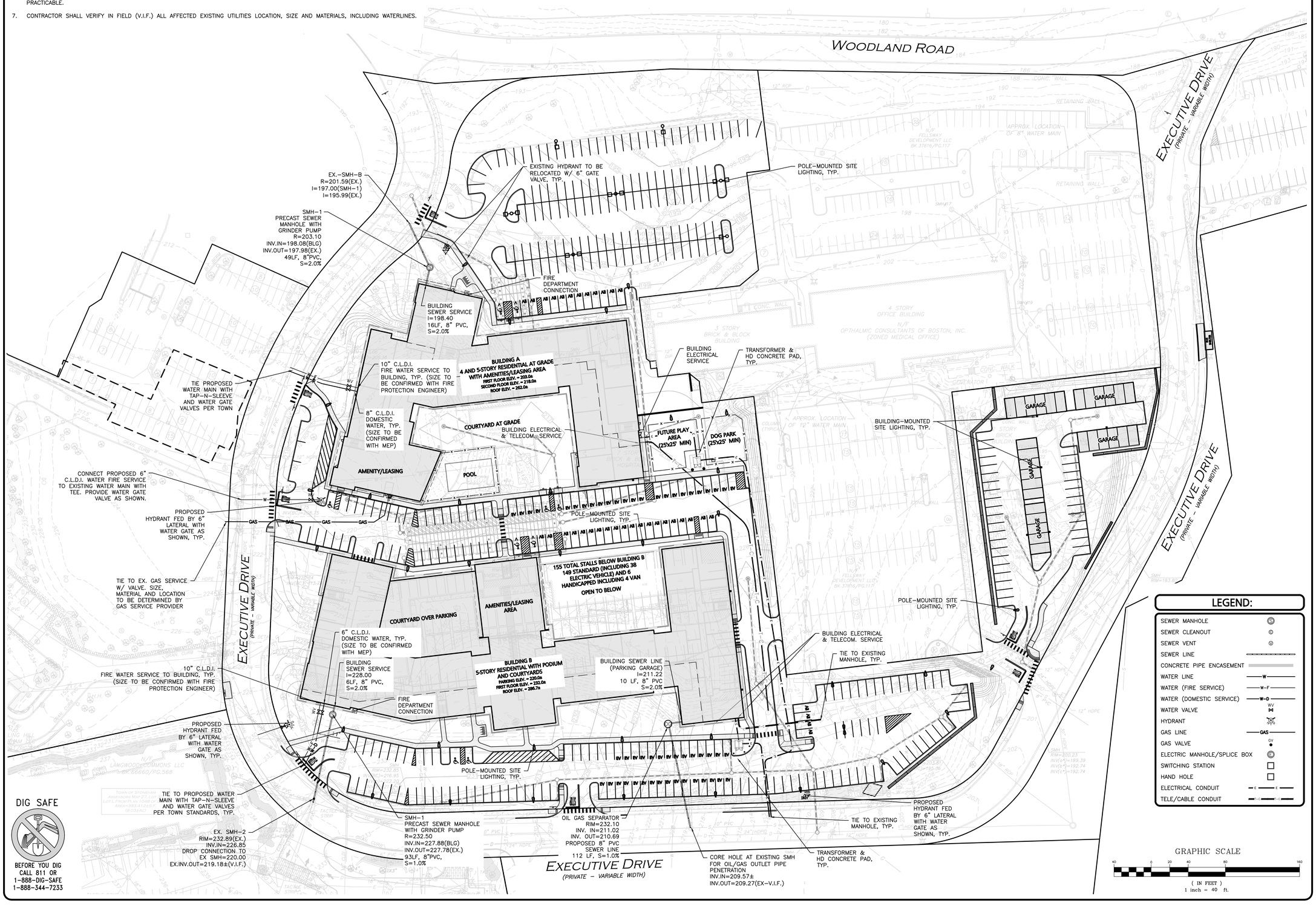

LEGEND:

SEWER MANHOLE	SS
SEWER CLEANOUT	CO
SEWER VENT	SV
SEWER LINE	
CONCRETE PIPE ENCASEMENT	
WATER LINE	W
WATER (FIRE SERVICE)	W–F
WATER (DOMESTIC SERVICE)	W–D
WATER VALVE	WV
HYDRANT	H
GAS LINE	GAS
GAS VALVE	GV
ELECTRIC MANHOLE/SPLICE BOX	E
SWITCHING STATION	
HAND HOLE	
ELECTRICAL CONDUIT	E E
TELE/CABLE CONDUIT	T T

GRAPHIC SCALE

40 0 20 40 80 160

(IN FEET)
1 inch = 40 ft.

COMMONWEALTH OF MASSACHUSETTS
CARLTON M. QUINN
CIVIL
No. 49923
REGISTERED PROFESSIONAL ENGINEER
4-30-24

PROFESSIONAL ENGINEER FOR ALLEN & MAJOR ASSOCIATES, INC.

REV	DATE	DESCRIPTION
1	2024-04-30	REVISED PER PEER REVIEW COMMENTS

APPLICANT\OWNER:
FELLSWAY DEVELOPMENT LLC
c/o THE GUTIERREZ CO.
200 SUMMIT DRIVE, SUITE 400
BURLINGTON, MA 01803

PROJECT:
THE RESIDENCES AT SPOT POND
MULTI-FAMILY HOUSING
5 WOODLAND ROAD
STONEHAM, MA 02180

PROJECT NO.	1145-01T	DATE:	2023-11-16
SCALE:	1"=40'	DWG. NAME:	C-1145-01T
DESIGNED BY:	DMR/MTB	CHECKED BY:	CMQ

PREPARED BY:
ALLEN & MAJOR ASSOCIATES, INC.
civil engineering ◆ land surveying
environmental consulting ◆ landscape architecture
www.allenmajor.com
100 COMMERCE WAY, SUITE 5
WOBURN MA 01801
TEL: (781) 935-6889
FAX: (781) 935-2896
WOBURN, MA ◆ LAKEVILLE, MA ◆ MANCHESTER, NH

THIS DRAWING HAS BEEN PREPARED IN DIGITAL FORMAT. CLIENT/CLIENT'S REPRESENTATIVE OR CONSULTANTS MAY BE PROVIDED COPIES OF DRAWINGS AND SPECIFICATIONS FOR HIS/HER INFORMATION AND/OR SPECIFIC USE ON THIS PROJECT, DUE TO THE POTENTIAL THAT THE PROVIDED INFORMATION MAY BE MODIFIED UNINTENTIONALLY OR OTHERWISE, ALLEN & MAJOR ASSOCIATES, INC. MAY REMOVE ALL INDICATION OF THE DOCUMENTS AUTHORSHIP ON THE DIGITAL MEDIA. PRINTED REPRESENTATIONS OR PORTABLE DOCUMENT FORMAT OF THE DRAWINGS AND SPECIFICATIONS ISSUED SHALL BE THE ONLY RECORD COPIES OF ALLEN & MAJOR ASSOCIATES, INC.'S WORK PRODUCT.

DRAWING TITLE: UTILITY PLAN

SHEET No. C-106

Copyright©2024 Allen & Major Associates, Inc.
All Rights Reserved

ISSUED FOR PERMITTING - NOT FOR CONSTRUCTION

N:\PROJECTS\1145-01T\CIVIL\DRAWINGS\CURRENT\C-1145-01T - UTILITY.DWG

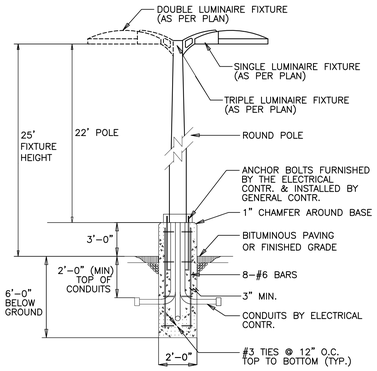

NOTE:

SIZE AND FOOTING FOR BASES TO BE VERIFIED BY STRUCTURAL ENGINEER.

SITE LIGHTING POLE & BASE DETAIL

NOT TO SCALE

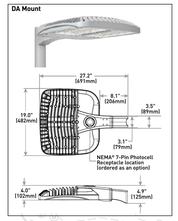

LIGHT FIXTURE - OSQ LED AREA - LARGE
CREE LIGHTING - OSQ SERIES

GENERAL PHOTOMETRIC SCHEDULE

AVERAGE FOOT-CANDLES	2.62
MAXIMUM FOOT-CANDLES	61.4
MINIMUM FOOT-CANDLES	0.0

LUMINAIRE SCHEDULE

CALLOUT	QUANTITY	SYMBOL	DESCRIPTION	MOUNTING	MOUNTING HEIGHT	TOTAL LUMENS	LAMP DEPRECIATION
LP1	13		Cree OSQ Series Area Luminaire, Type IV Medium, U Input Power Designator, 4000K	POLE	25'-0"	26583	0.9
LP2	37		Cree OSQ Series Area Luminaire, Type III Medium Distribution, K Input Power Designator, 4000K	POLE	14'-0"	16830	0.9
LW3	10		Cree OSQ Series Area Luminaire, Type III Medium, T Input Power Designator, 4000K CONFIGURED FROM Cree OSQ Series Area Luminaire, Type III Medium, U Input Power Designator, 4000K	WALL	8'-0"	21	0.9

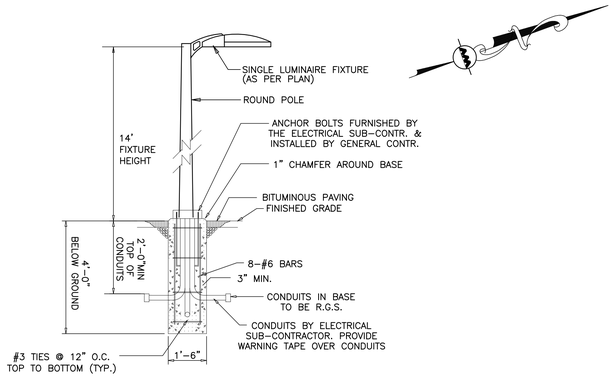

NOTE:

SIZE AND FOOTING FOR BASES TO BE VERIFIED BY STRUCTURAL ENGINEER.

LIGHT POLE & BASE DETAIL

NOT TO SCALE

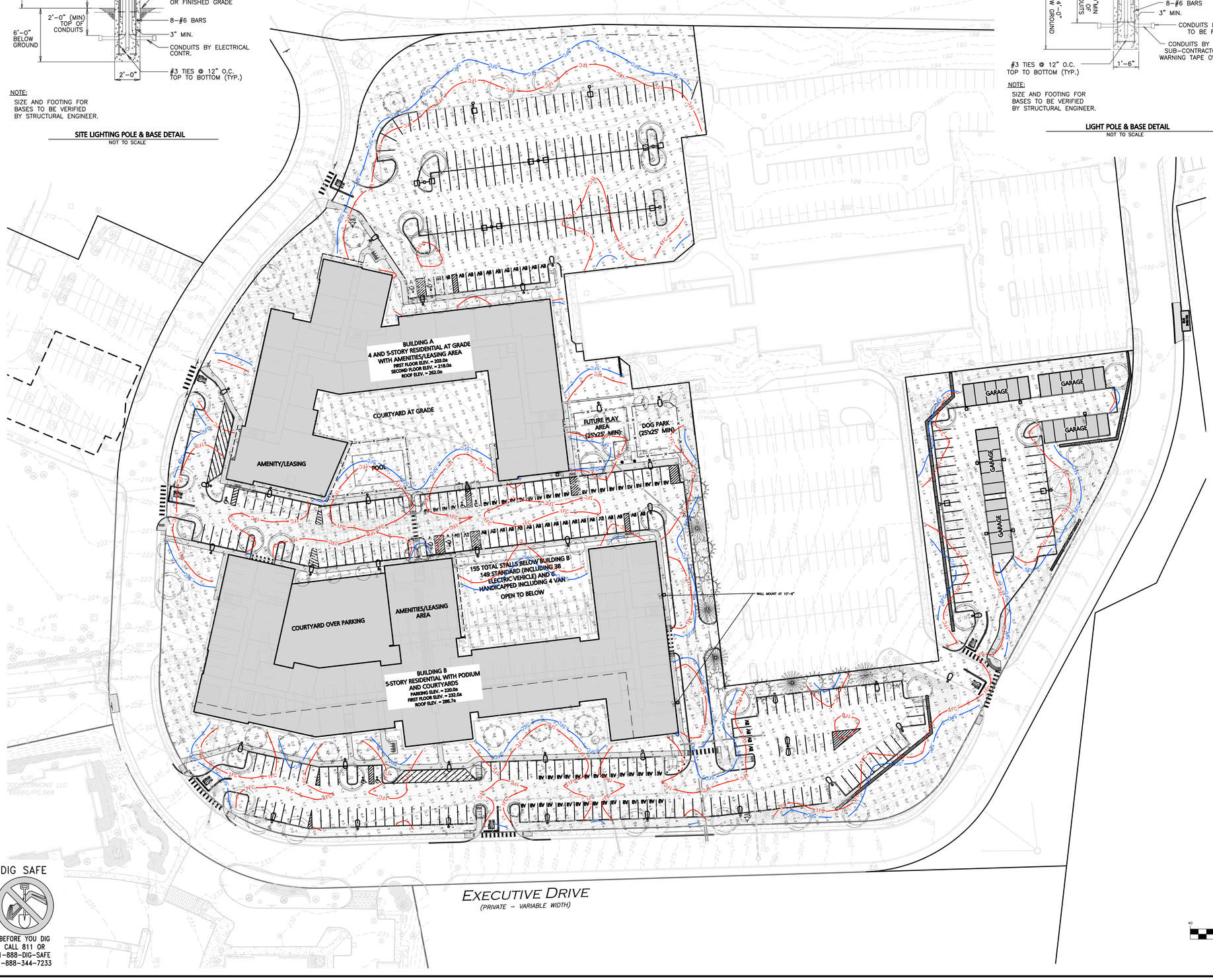

LEGEND

DOUBLE POLE LIGHT	
SINGLE POLE LIGHT	
WALL MOUNT LIGHT	
BOLLARD LIGHT	
1 FOOTCANDLE CONTOUR	1FC
.5 FOOTCANDLE CONTOUR	.5FC
LIGHTING LEVELS GIVEN IN FOOT-CANDLES	0.1 0.2 0.4 0.6

NOTES:

1. THE LOCATIONS OF EXISTING UNDERGROUND UTILITIES ARE SHOWN IN AN APPROXIMATE WAY ONLY AND HAVE NOT BEEN INDEPENDENTLY VERIFIED BY THE OWNER OR IT'S REPRESENTATIVE. THE CONTRACTOR SHALL DETERMINE THE EXACT LOCATION OF ALL EXISTING UTILITIES BEFORE COMMENCING WORK, AND AGREES TO BE FULLY RESPONSIBLE FOR ANY AND ALL DAMAGES WHICH MIGHT BE OCCASIONED BY THE CONTRACTOR'S FAILURE TO EXACTLY LOCATE AND PRESERVE ANY AND ALL UNDERGROUND UTILITIES.
2. THE INFORMATION SHOWN ON THIS PLAN IS THE SOLE PROPERTY OF ALLEN & MAJOR ASSOCIATES, INC. IT'S INTENDED USE IS TO PROVIDE INFORMATION. ANY ALTERATION, MISUSE, OR RECALCULATION OF INFORMATION OR DATA WITHOUT THE EXPRESSED, WRITTEN CONSENT OF ALLEN & MAJOR ASSOCIATES, INC. IS STRICTLY PROHIBITED.
3. FOOT CANDLE VALUES SHOWN ON THE PLAN ARE PRODUCED UTILIZING DESIGN MASTER PHOTOMETRICS SOFTWARE AND ASSOCIATED IES FILES BY THE MANUFACTURER FOR THE PROPOSED LIGHT FIXTURE.
4. ALL PHOTOMETRIC DATA REFERS TO UNITS IN FOOT CANDLES (FC). THE LIMIT OF 1.0 FC ILLUMINATION IS SHOWN IN A RED SOLID LINE AND THE LIMIT OF THE 0.5 FOOT CANDLE (FC) ILLUMINATION IS SHOWN IN BLUE.
5. QUANTITY SHOWN IN LUMINIARE SCHEDULE TABLE DENOTES NUMBER OF FIXTURE HEADS. REFER TO PLAN FOR POLES WITH DOUBLE FIXTURES.
6. ALL ILLUMINATION ON PARKING LOTS MUST BE SHIELDED SO AS NOT TO SHINE UPON ABUTTING PROPERTIES.
7. SEE ARCHITECTURAL DRAWINGS FOR ADDITIONAL LIGHTING INFORMATION.
8. ALL PROPOSED LIGHTING FIXTURES SHALL BE DARK SKY COMPLIANT.
9. LIGHT POLES ADJACENT TO PARKING SHALL HAVE THE 3'-0" REVEAL FOOTING. LIGHT POLES ADJACENT TO SIDEWALKS SHALL HAVE FOOTING IN A FLUSH CONDITION.

GRAPHIC SCALE

40 0 20 40 80 160

(IN FEET)
1 inch = 40 ft.

DIG SAFE

BEFORE YOU DIG CALL 811 OR 1-888-DIG-SAFE 1-888-344-7233

N:\PROJECTS\1145-01\CAD\DWGS\CURRENT\LIGHTING PLAN 00 MOVE FOLDER\C-1145-01T - LIGHTING.DWG

ISSUED FOR PERMITTING - NOT FOR CONSTRUCTION

COMMONWEALTH OF MASSACHUSETTS
CARLTON M. QUINN
CIVIL
No. 49923
REGISTERED PROFESSIONAL ENGINEER
04/30/2024

PROFESSIONAL ENGINEER FOR ALLEN & MAJOR ASSOCIATES, INC.

REV	DATE	DESCRIPTION
1	2024-04-30	REVISED PER PEER REVIEW COMMENTS

APPLICANT\OWNER:
FELLSWAY DEVELOPMENT LLC
c/o THE GUTIERREZ CO.
200 SUMMIT DRIVE, SUITE 400
BURLINGTON, MA 01803

PROJECT:
THE RESIDENCES AT SPOT POND
MULTI-FAMILY HOUSING
5 WOODLAND ROAD
STONEHAM, MA 02180

PROJECT NO.	1145-01T	DATE:	2023-11-16
SCALE:	1" = 40'	DWG. NAME:	C-1145-01T
DESIGNED BY:	DMR/MTB	CHECKED BY:	CMQ

PREPARED BY:
ALLEN & MAJOR ASSOCIATES, INC.
civil engineering ◆ land surveying
environmental consulting ◆ landscape architecture
www.allenmajor.com
100 COMMERCE WAY, SUITE 5
WOBURN MA 01801
TEL: (781) 935-6889
FAX: (781) 935-2896
WOBURN, MA ◆ LAKEVILLE, MA ◆ MANCHESTER, NH

THIS DRAWING HAS BEEN PREPARED IN DIGITAL FORMAT. CLIENT/CLIENT'S REPRESENTATIVE OR CONSULTANTS MAY BE PROVIDED COPIES OF DRAWINGS AND SPECIFICATIONS FOR HIS/HER INFORMATION AND/OR SPECIFIC USE ON THIS PROJECT. DUE TO THE POTENTIAL THAT THE PROVIDED INFORMATION MAY BE MODIFIED UNINTENTIONALLY OR OTHERWISE, ALLEN & MAJOR ASSOCIATES, INC. MAY REMOVE ALL INDICATION OF THE DOCUMENT'S AUTHORSHIP ON THE DIGITAL MEDIA. PRINTED REPRESENTATIONS OR PORTABLE DOCUMENT FORMAT OF THE DRAWINGS AND SPECIFICATIONS ISSUED SHALL BE THE ONLY RECORD COPIES OF ALLEN & MAJOR ASSOCIATES, INC'S WORK PRODUCT.

DRAWING TITLE: PHOTOMETRICS PLAN

SHEET No. C-107

Copyright©2024 Allen & Major Associates, Inc.
All Rights Reserved

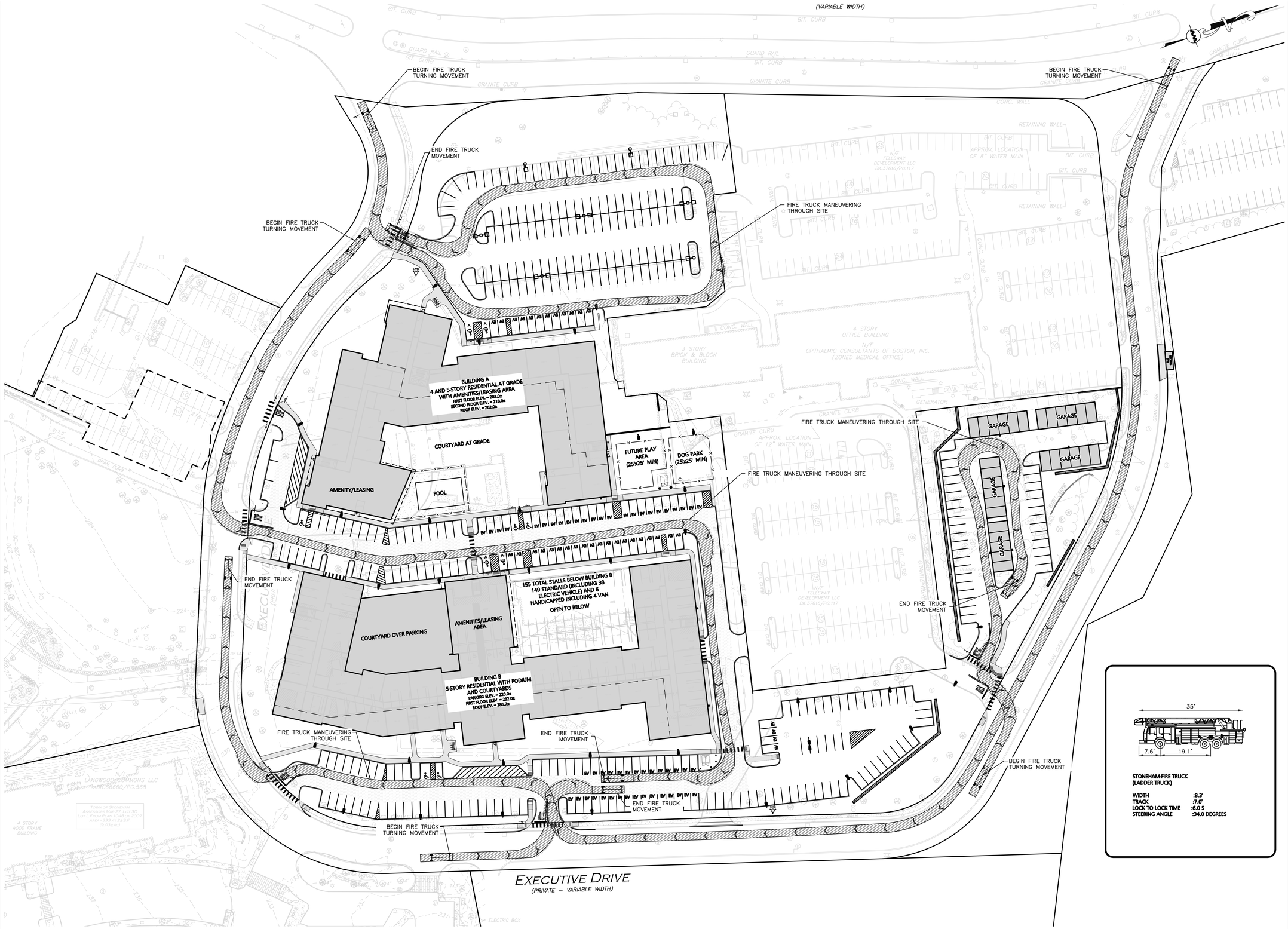

DIG SAFE

BEFORE YOU DIG
CALL 811 OR
1-888-DIG-SAFE
1-888-344-7233

W:\PROJECTS\1145-01T\CIVIL\DRAWINGS\CURRENT\C-1145-01T – TRUCK TURNING – FIRE.DWG

ISSUED FOR PERMITTING - NOT FOR CONSTRUCTION

COMMONWEALTH OF MASSACHUSETTS
4.30.24
CARLTON M. QUINN
CIVIL
No.49923
REGISTERED PROFESSIONAL ENGINEER

PROFESSIONAL ENGINEER FOR
ALLEN & MAJOR ASSOCIATES, INC.

REV	DATE	DESCRIPTION
1	2024-04-30	REVISED PER PEER REVIEW COMMENTS

APPLICANT\OWNER:
FELLSWAY DEVELOPMENT LLC
c/o THE GUTIERREZ CO.
200 SUMMIT DRIVE, SUITE 400
BURLINGTON, MA 01803

PROJECT:
THE RESIDENCES AT SPOT POND
MULTI-FAMILY HOUSING
5 WOODLAND ROAD
STONEHAM, MA 02180

PROJECT NO.	1145-01T	DATE:	2023-11-16
SCALE:	1"=40'	DWG. NAME:	C-1145-01T
DESIGNED BY:	DMR/MTB	CHECKED BY:	CMQ

PREPARED BY:

ALLEN & MAJOR ASSOCIATES, INC.
civil engineering ◆ land surveying
environmental consulting ◆ landscape architecture
www.allenmajor.com
100 COMMERCE WAY, SUITE 5
WOBURN MA 01801
TEL: (781) 935-6889
FAX: (781) 935-2896
WOBURN, MA ◆ LAKEVILLE, MA ◆ MANCHESTER, NH

THIS DRAWING HAS BEEN PREPARED IN DIGITAL FORMAT. CLIENT/CLIENT'S REPRESENTATIVE OR CONSULTANTS MAY BE PROVIDED COPIES OF DRAWINGS AND SPECIFICATIONS FOR HIS/HER INFORMATION AND/OR SPECIFIC USE ON THIS PROJECT. DUE TO THE POTENTIAL THAT THE PROVIDED INFORMATION MAY BE MODIFIED UNINTENTIONALLY OR OTHERWISE, ALLEN & MAJOR ASSOCIATES, INC. MAY REMOVE ALL INDICATION OF THE DOCUMENT'S AUTHORSHIP ON THE DIGITAL MEDIA. PRINTED REPRESENTATIONS OR PORTABLE DOCUMENT FORMAT OF THE DRAWINGS AND SPECIFICATIONS ISSUED SHALL BE THE ONLY RECORD COPIES OF ALLEN & MAJOR ASSOCIATES, INC.'S WORK PRODUCT.

DRAWING TITLE:
FIRE TRUCK TURNING PLAN

SHEET No.
C-108

Copyright©2024 Allen & Major Associates, Inc.
All Rights Reserved

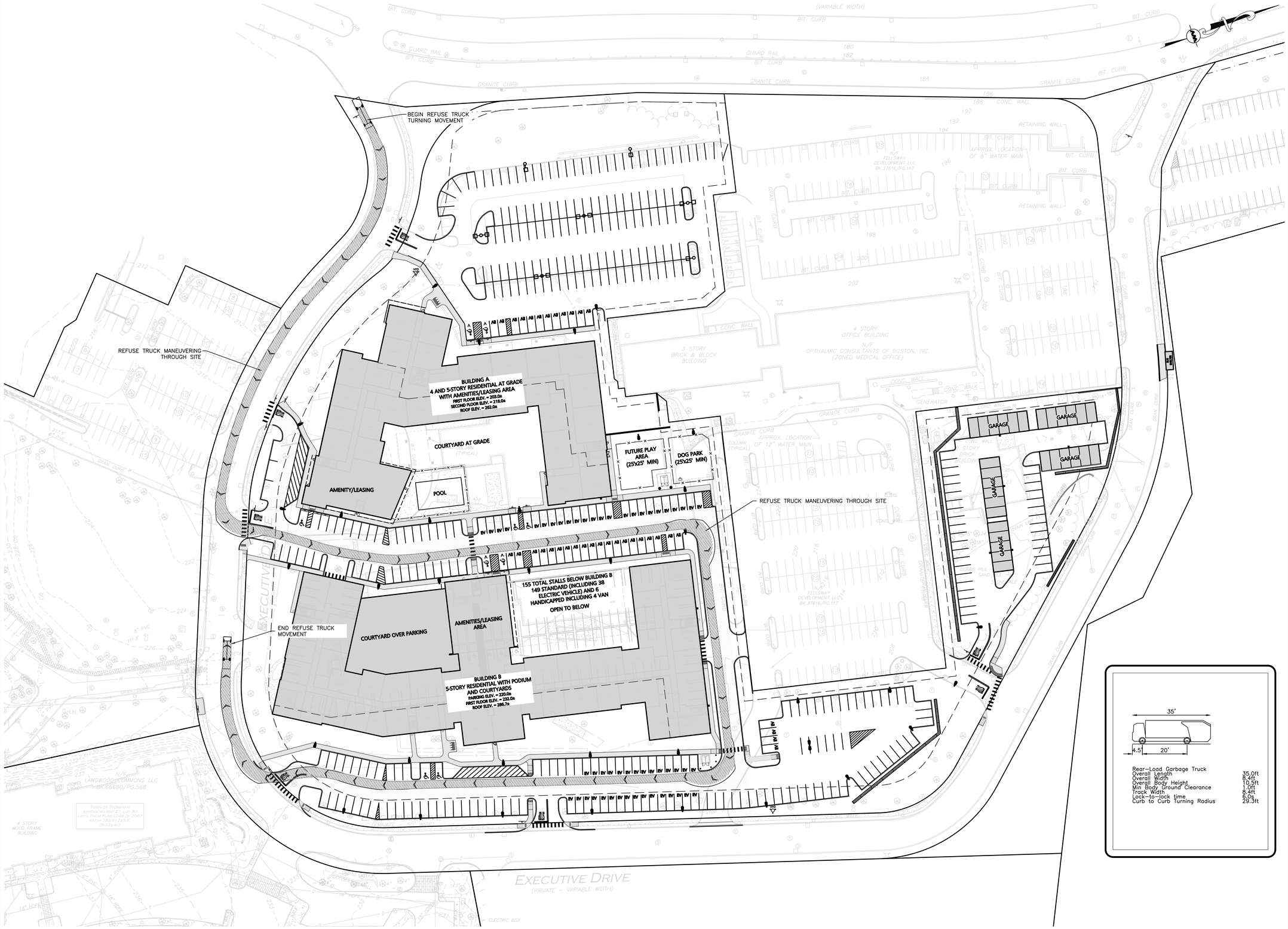

GRAPHIC SCALE

40 0 20 40 80 160

(IN FEET)
1 inch = 40 ft.

DIG SAFE

BEFORE YOU DIG
CALL 811 OR
1-888-DIG-SAFE
1-888-344-7233

N:\PROJECTS\1145-01T\CIVIL\DRAWINGS\CURRENT\C-1145-01T – TRUCK TURNING – REFUSE.DWG

ISSUED FOR PERMITTING - NOT FOR CONSTRUCTION

COMMONWEALTH OF MASSACHUSETTS
CARLTON M. QUINN
CIVIL
No. 49923
REGISTERED PROFESSIONAL ENGINEER
4.30.24

PROFESSIONAL ENGINEER FOR
ALLEN & MAJOR ASSOCIATES, INC.

REV	DATE	DESCRIPTION
1	2024-04-30	REVISED PER PEER REVIEW COMMENTS

APPLICANT\OWNER:
FELLSWAY DEVELOPMENT LLC
c/o THE GUTIERREZ CO.
200 SUMMIT DRIVE, SUITE 400
BURLINGTON, MA 01803

PROJECT:
THE RESIDENCES AT SPOT POND
MULTI-FAMILY HOUSING
5 WOODLAND ROAD
STONEHAM, MA 02180

PROJECT NO.	1145-01T	DATE:	2023-11-16
SCALE:	1"=40'	DWG. NAME:	C-1145-01T
DESIGNED BY:	DMR/MTB	CHECKED BY:	CMQ

PREPARED BY:

ALLEN & MAJOR ASSOCIATES, INC.
civil engineering ◆ land surveying
environmental consulting ◆ landscape architecture
www.allenmajor.com
100 COMMERCE WAY, SUITE 5
WOBURN MA 01801
TEL: (781) 935-6889
FAX: (781) 935-2896
WOBURN, MA ◆ LAKEVILLE, MA ◆ MANCHESTER, NH

THIS DRAWING HAS BEEN PREPARED IN DIGITAL FORMAT. CLIENT/CLIENT'S REPRESENTATIVE OR CONSULTANTS MAY BE PROVIDED COPIES OF DRAWINGS AND SPECIFICATIONS FOR HIS/HER INFORMATION AND/OR SPECIFIC USE ON THIS PROJECT. DUE TO THE POTENTIAL THAT THE PROVIDED INFORMATION MAY BE MODIFIED UNINTENTIONALLY OR OTHERWISE, ALLEN & MAJOR ASSOCIATES, INC. MAY REMOVE ALL INDICATION OF THE DOCUMENT'S AUTHORSHIP ON THE DIGITAL MEDIA. PRINTED REPRESENTATIONS OR PORTABLE DOCUMENT FORMAT OF THE DRAWINGS AND SPECIFICATIONS ISSUED SHALL BE THE ONLY RECORD COPIES OF ALLEN & MAJOR ASSOCIATES, INC.'S WORK PRODUCT.

DRAWING TITLE:
REFUSE TRUCK TURNING PLAN

SHEET No.
C-109

Copyright©2024 Allen & Major Associates, Inc.
All Rights Reserved

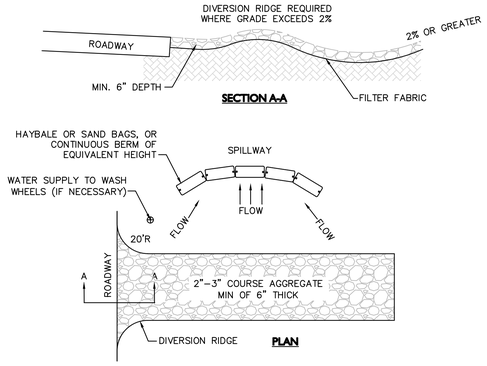

NOTES:

1. THE ENTRANCE SHALL BE MAINTAINED IN A CONDITION THAT WILL PREVENT TRACKING OR FLOWING OF SEDIMENT ONTO PUBLIC RIGHT-OF-WAYS. THIS MAY REQUIRE TOP DRESSING, REPAIR AND/OR CLEANOUT OF ANY MEASURES USED TO TRAP SEDIMENT.
2. WHEN NECESSARY, WHEELS SHALL BE CLEANED PRIOR TO ENTERING THE PUBLIC RIGHT-OF-WAY.
3. WHEN WASHING IS REQUIRED, IT SHALL BE DONE ON AN AREA STABILIZED WITH CRUSHED STONE THAT DRAINS INTO AN APPROVED SEDIMENT TRAP OR SEDIMENT BASIN.
4. USE SANDBAGS, HAYBALES, OR OTHER APPROVED METHODS TO CHANNELIZE RUNOFF TO BASIN AS REQUIRED.
5. SEE EROSION CONTROL PLAN FOR PAD DIMENSIONS AND LOCATION.

TEMPORARY CONSTRUCTION ENTRANCE/TRACKING PAD — NOT TO SCALE — 1

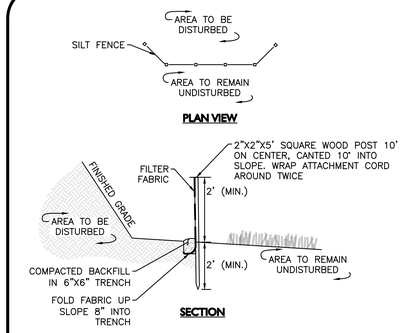

NOTE:
DEPTH TO BE 2' UNLESS POST IS TO BE SET IN PEAT THEN 3' OR DEPTH POSSIBLE BY PUSHING BY HAND SHALL BE REQUIRED.

SILT FENCE DETAIL — NOT TO SCALE — 2

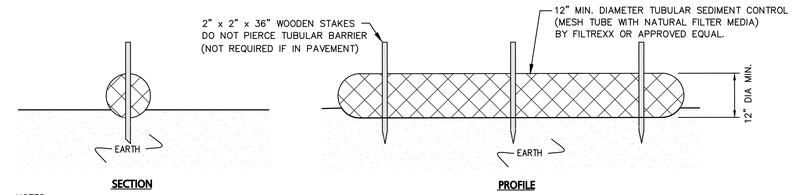

NOTES:

1. ALL MATERIALS TO MEET MANUFACTURERS SPECIFICATIONS.
2. INSTALL WOODEN STAKES IN A CRISS-CROSS PATTERN EVERY 8' ON CENTER.
2. OVERLAP TUBULAR BARRIER SEGMENTS A MINIMUM OF 12".
3. THE CONTRACTOR SHALL MAINTAIN THE TUBULAR BARRIERS IN A FUNCTIONAL CONDITION AT ALL TIMES. THE CONTROLS SHALL BE ROUTINELY INSPECTED BY THE CONTRACTOR.
4. WHERE THE TUBULAR BARRIERS REQUIRE REPAIR OR SEDIMENT REMOVAL, IT WILL BE COMPLETED BY THE CONTRACTOR AT NO ADDITIONAL COST.
5. AT A MINIMUM, THE CONTRACTOR SHALL REMOVE SEDIMENTS COLLECTED AT THE BASE WHEN THEY REACH 1/3 THE EXPOSED HEIGHT OF THE BARRIER.

TUBULAR SEDIMENT BARRIER DETAIL — NOT TO SCALE — 3

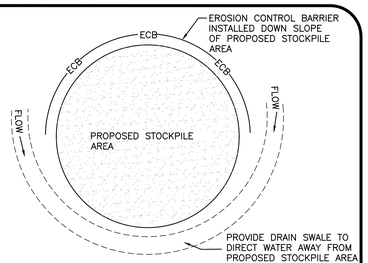

NOTES:

1. SOIL AND FILL STOCKPILES EXPECTED TO REMAIN IN PLACE FOR LESS THAN 90 DAYS SHALL BE COVERED WITH STRAW AND MULCH (AT 100 LBS/1,000 S.F.) OR WITH AN ANCHORED TARP WITHIN 7 DAYS OR PRIOR TO ANY RAINFALL.
2. SOIL AND FILL STOCKPILES EXPECTED TO REMAIN IN PLACE FOR 90 DAYS OR MORE SHALL BE SEEDED WITH WINTER RYE (FOR FALL SEEDING AT 1LB/1,000 SF) OR OATS (FOR SUMMER SEEDING AT 2LB/1,000 SF) AND THEN COVERED WITH HAY MULCH (AT 100LB/1,000 SF) OR AN ANCHORED TARP WITHIN 7 DAYS OR PRIOR TO ANY RAINFALL.

STOCKPILE PROTECTION — NOT TO SCALE — 4

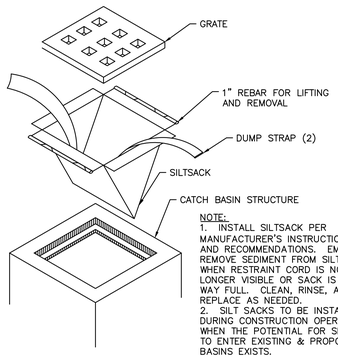

NOTE:
1. INSTALL SILTSACK PER MANUFACTURER'S INSTRUCTIONS AND RECOMMENDATIONS. EMPTY OR REMOVE SEDIMENT FROM SILTSACK WHEN RESTRAINT CORD IS NO LONGER VISIBLE OR SACK IS HALF WAY FULL. CLEAN, RINSE, AND REPLACE AS NEEDED.
2. SILT SACKS TO BE INSTALLED DURING CONSTRUCTION OPERATIONS WHEN THE POTENTIAL FOR SEDIMENT TO ENTER EXISTING & PROPOSED BASINS EXISTS.

SILTSACK INLET DETAIL — NOT TO SCALE — 5

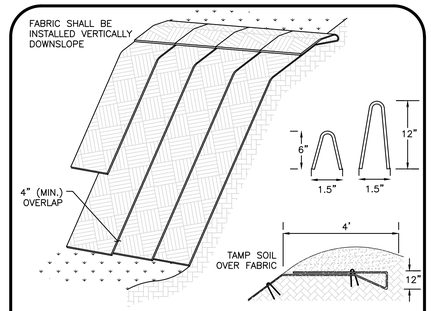

NOTE:
1. SLOPE SURFACE SHALL BE FREE OF ROCKS, CLODS, STICKS AND GRASS. FABRIC SHALL HAVE GOOD SOIL CONTACT.
2. APPLY PERMANENT SEEDING BEFORE PLACING FABRIC.
3. LAY BLANKETS LOOSELY AND STAKE OR STAPLE TO MAINTAIN DIRECT CONTACT WITH THE SOIL. DO NOT STRETCH.
4. CHOOSE MATERIAL BASED ON SLOPE, SOILS, AND APPLICATION.

EROSION CONTROL FABRIC — NOT TO SCALE — 6

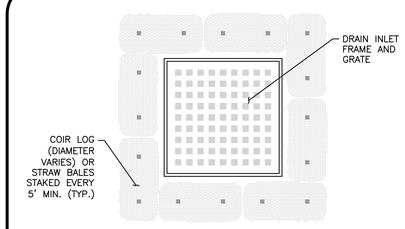

NOTES:

1. STRAW BALES SHALL BE POSITIONED IN A ROW SO THAT EACH END TIGHTLY ABUTTS THE ADJACENT BALE.
2. BALES SHALL BE SECURELY ANCHORED IN PLACE BY STAKES OR RE-BARS DRIVEN THROUGH THE BALES. THE FIRST STAKE IN EACH BALE SHALL BE ANGLED TOWARD PREVIOUSLY LAID BALE TO FORCE BALES TOGETHER.
3. FREQUENT INSPECTIONS SHALL BE CONDUCTED AND REPAIR OR REPLACEMENT SHALL BE MADE PROMPTLY IF NECESSARY.

TYPICAL STRAW BALE FILTER DETAIL — NOT TO SCALE — 7

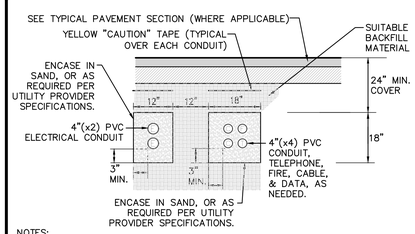

NOTES:

1. CONDUITS SHALL BE SCHEDULE 80 PVC UNDER ROAD AND DRIVEWAY SURFACES.
2. ALL UTILITY INSTALLATION REQUIREMENTS, SEPARATIONS, AND CONDUIT SIZES TO BE VERIFIED WITH EACH UTILITY COMPANY PRIOR TO INSTALLATION OF ANY UNDERGROUND UTILITY CONDUIT.
3. SEE SITE ELECTRICAL PLANS FOR SPECIFIC SERVICE PROVIDER DETAILS.

BURIED CONDUIT DETAIL — NOT TO SCALE — 8

NOTES:

1. MINIMUM BURIAL DEPTH (FINISH GRADE TO TOP OF PIPE) GRAVITY PIPE (SEWER & DRAIN) – SEE PLAN OR PROFILE PRESSURE PIPE UNDER PAVING – 4' PRESSURE PIPE BENEATH UNPAVED – 3' WATER PIPE – 5'
2. WHERE BACKFILL IS DESIGNATED AS COMPACTED, THIS MEANS 90 TO 95% STANDARD PROCTOR. AASHTO T-99. ALL FILL PLACED BELOW PIPES AND STRUCTURES MUST MEET THIS REQUIREMENT.
3. TRENCHES WITHIN PUBLIC RIGHT OF WAY MAY REQUIRE FLOWABLE FILL. VERIFY WITH MUNICIPAL ENGINEER.
4. WHERE WASTE FILLS ARE ENCOUNTERED AT SUBGRADE LEVEL FOR NEW UTILITIES, THE FILL SHOULD BE OVER-EXCAVATED, THE SUBGRADE SHOULD BE RE-COMPACTED, AND BACKFILL CONSISTING OF PIPE BEDDING MATERIAL, CRUSHED STONE OR OTHER SUITABLE GRANULAR FILL SHOULD BE PLACED TO A SUFFICIENT DEPTH TO CREATE A FIRM AND STABLE SUBGRADE (TYPICALLY 12 TO 18 INCHES OVER-EXCAVATION).
5. REFER TO PAVING, CURBS, WALKS AND DRIVEWAY DETAILS.
6. REFER TO LANDSCAPING DETAILS.

FILTER FABRIC USE

	SOIL TYPE	
	SILT OR CLAY	GRANULAR SOIL
ABOVE GROUND WATER	FILTER FABRIC NOT REQUIRED	FILTER FABRIC NOT REQUIRED
BELOW GROUND WATER	FILTER FABRIC REQUIRED	FILTER FABRIC NOT REQUIRED

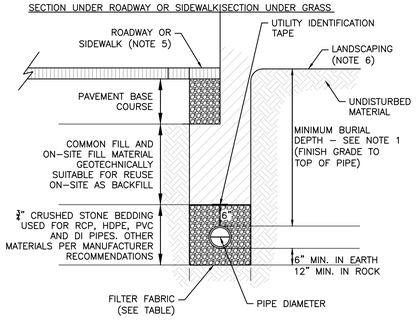

UTILITY TRENCH — NOT TO SCALE — 9

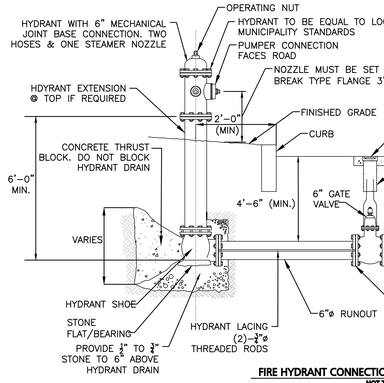

NOTES:

1. ALL HYDRANTS, VALVES AND LOCAL CONNECTIONS SHALL COMPLY WITH THE SPECIFICATIONS OF THE LOCAL MUNICIPALITY.
2. PIPING TO BE RESTRAINED WITH RODDING OR RETAINING GLANDS.
3. GATE VALVE INSTALLATION IS TYPICAL FOR ALL GATES SHOWN ON THE DRAWINGS.

FIRE HYDRANT CONNECTION WITH MECHANICAL JOINT — NOT TO SCALE — 10

NOTES:

1. ALL WATER MAIN FITTINGS, BENDS, TEES, PLUGS ETC. SHALL BE RESTRAINED W/ THRUST BLOCKS EXCEPT WHERE NOTED.
2. ALL THRUST BLOCKS & COLLARS SHALL BE INSTALLED SO THAT THEY BEAR AGAINST UNDISTURBED EARTH.
3. SIZE OF CONCRETE THRUST BLOCKS SHALL BE AS NOTED BELOW.
4. MINIMUM COMPRESSIVE STRENGTH OF THRUST BLOCK CONCRETE SHALL BE 3,000 P.S.I.
5. KEEP CONCRETE CLEAR OF MECHANICAL JOINTS.
6. THE BELOW PREDICATED ON A WATER PRESSURE OF 225 PSI AND A SOIL RESISTANCE OF 2000 PSF (TILL). FOR OTHER SOILS THE VALUES IN THE ABOVE TABLE SHALL BE MULTIPLIED BY:

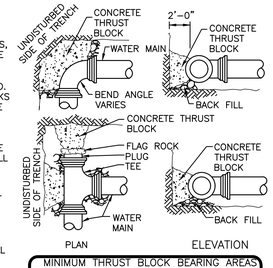

	MINIMUM THRUST BLOCK BEARING AREAS			
PIPE ø	90° BEND (SQ. FT.)	45° BEND (SQ. FT.)	22.5° BEND (SQ. FT.)	TEES, PLUGS, CAPS & HYD. (SQ.FT.)
6"	5	3	3	4
8"	9	6	3	9
10"	13	7	4	12
12"	20	10	5	16

THRUST BLOCK DETAILS — NOT TO SCALE — 11

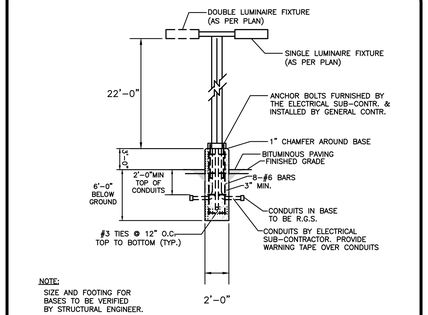

NOTE:
SIZE AND FOOTING FOR BASES TO BE VERIFIED BY STRUCTURAL ENGINEER.

RAISED LIGHT POLE BASE - 2' DIAMETER — NOT TO SCALE — 12

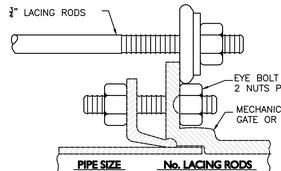

PIPE SIZE	No. LACING RODS
4", 6" & 8"	2 – 3/4" *
10" & 12"	4 – 3/4" *
16"	4 – 3/4" *
20"	6 – 3/4" *

* STANDARD LENGTHS ARE 6' & 10'. COUPLINGS MAY BE USED FOR LONGER LENGTHS.

NOTES:

1. NUMBER OF LACING RODS IS BASED ON MAXIMUM PRESSURE OF 125 P.S.I. IN MAIN.
2. EYE-BOLTS AND LACING RODS ARE TO BE FABRICATED FROM A-36 STEEL.
3. STEEL LACING RODS SHALL HAVE A YIELD STRESS OF NOT LESS THAN 36,000 P.S.I.
4. EYE-BOLTS SHALL HAVE A MINIMUM TENSILE STRENGTH OF 7,000 LBS. EACH.

MECHANICAL JOINT LACING DETAIL — NOT TO SCALE — 13

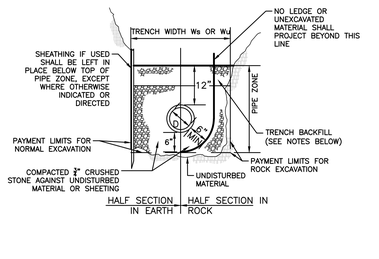

NOTES:

1. TRENCH BACKFILL TO BE USED WITHIN THE RIGHT-OF-WAY SHALL CONSIST OF EITHER GRAVEL BORROW MEETING MHD SPECIFICATION M1.03.0, TYPE "B" OR PROCESSED GRAVEL BORROW FOR SUBBASE MEETING MHD SPECIFICATION M1.03.1.
2. WHERE THE REMOVAL OF 100 SQUARE FEET OR LESS OF ASPHALT IS REQUIRED WITHIN THE RIGHT OF WAY, THEN THE TRENCH BACKFILL MATERIAL SHALL CONSIST OF CONTROLLED DENSITY FILL MEETING MHD SPECIFICATION M4.08.0, TYPE "1E" OR "2E".
3. TRENCH BACKFILL MATERIAL TO BE USED OF THE RIGHT-OF-WAY MAY CONSIST OF MATERIAL GENERATED DURING EXCAVATIONS PROVIDED ALL STONES GREATER THAN 4" ARE REMOVED PRIOR TO PLACEMENT AND COMPACTION
4. GRANULAR TRENCH BACKFILL MATERIAL USED WITHIN THE RIGHT-OF-WAY SHALL BE PLACED IN MAXIMUM 6" LIFTS AND MECHANICALLY COMPACTED TO A MINIMUM OF 95% OF THE MATERIAL'S MAXIMUM DRY DENSITY AND TO 90% ELSEWHERE AS DETERMINED BY ASTM D 1557.

SEWER TRENCH — NOT TO SCALE — 14

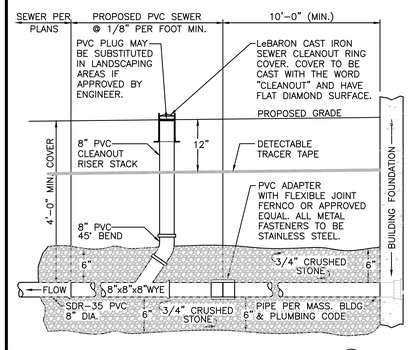

BUILDING SEWER SERVICE — NOT TO SCALE — 15

N:\PROJECTS\1145-01T\CIVIL\DRAWINGS\CURRENT\C-1145-01T - DETAILS.DWG

ISSUED FOR PERMITTING - NOT FOR CONSTRUCTION

COMMONWEALTH OF MASSACHUSETTS
CARLTON M. QUINN
CIVIL
No. 49923
REGISTERED PROFESSIONAL ENGINEER
4-30-24
PROFESSIONAL ENGINEER FOR ALLEN & MAJOR ASSOCIATES, INC.

REV	DATE	DESCRIPTION
1	2024-04-30	REVISED PER PEER REVIEW COMMENTS

APPLICANT\OWNER:
FELLSWAY DEVELOPMENT LLC
c/o THE GUTIERREZ CO.
200 SUMMIT DRIVE, SUITE 400
BURLINGTON, MA 01803

PROJECT:
THE RESIDENCES AT SPOT POND
MULTI-FAMILY HOUSING
5 WOODLAND ROAD
STONEHAM, MA 02180

PROJECT NO.	1145-01T	DATE:	2023-11-16
SCALE:	AS SHOWN	DWG. NAME:	C-1145-01T
DESIGNED BY:	DMR/MTB	CHECKED BY:	CMQ

PREPARED BY:
ALLEN & MAJOR ASSOCIATES, INC.
civil engineering ◆ land surveying
environmental consulting ◆ landscape architecture
www.allenmajor.com
100 COMMERCE WAY, SUITE 5
WOBURN MA 01801
TEL: (781) 935-6889
FAX: (781) 935-2896
WOBURN, MA ◆ LAKEVILLE, MA ◆ MANCHESTER, NH

THIS DRAWING HAS BEEN PREPARED IN DIGITAL FORMAT. CLIENT/CLIENT'S REPRESENTATIVE OR CONSULTANTS MAY BE PROVIDED COPIES OF DRAWINGS AND SPECIFICATIONS FOR HIS/HER INFORMATION AND/OR SPECIFIC USE ON THIS PROJECT. DUE TO THE POTENTIAL THAT THE PROVIDED INFORMATION MAY BE MODIFIED UNINTENTIONALLY OR OTHERWISE, ALLEN & MAJOR ASSOCIATES, INC. MAY REMOVE ALL INDICATION OF THE DOCUMENTS AUTHORSHIP ON THE DIGITAL MEDIA. PRINTED REPRESENTATIONS OR PORTABLE DOCUMENT FORMAT OF THE DRAWINGS AND SPECIFICATIONS ISSUED SHALL BE THE ONLY RECORD COPIES OF ALLEN & MAJOR ASSOCIATES, INC.'S WORK PRODUCT.

DRAWING TITLE: DETAILS

SHEET No. C-501

Copyright©2024 Allen & Major Associates, Inc.
All Rights Reserved

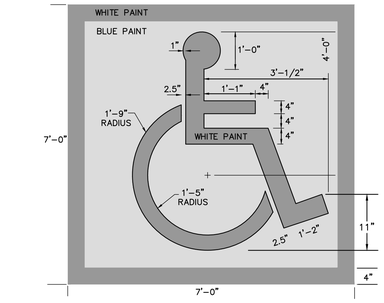

SYMBOL TO BE CENTERED ON WIDTH OF PARKING STALL. SYMBOL IS REQUIRED TO CONTRAST WITH BACKGROUND. USE WHITE ON BLUE (COLOR #105090 IN FEDERAL STANDARD 5952) DOUBLE COAT. DYNAMIC SYMBOL SHALL NOT BE USED PER STONEHAM POLICE DEPARTMENT (SPD).

ACCESSIBLE PARKING STALL PAVEMENT MARKING (1)
NOT TO SCALE

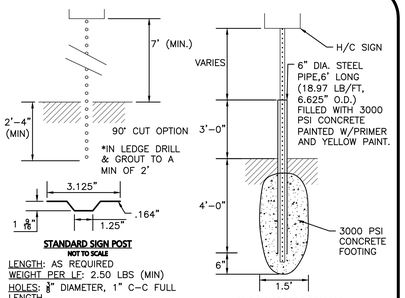

STANDARD SIGN POST
NOT TO SCALE

LENGTH: AS REQUIRED
WEIGHT PER LF: 2.50 LBS (MIN)
HOLES: 9/16" DIAMETER, 1" C-C FULL LENGTH
STEEL: SHALL CONFORM TO ASTM A-499 OR ASTM A-576
FINISH: SHALL BE PAINTED WITH 2 COATS OF AN APPROVED MEDIUM GREEN, BAKED ON OR AIR DRIED, PAINT OF WEATHER RESISTANT QUALITY.

H/C SIGN POST & BOLLARD
NOT TO SCALE

NOTE:
1. STEEL PIPE BOLLARD & CONCRETE FOOTING TO BE USED ON POST MOUNTED SIGNS IN PAVED AREAS.

SIGN POST DETAIL (2)
NOT TO SCALE

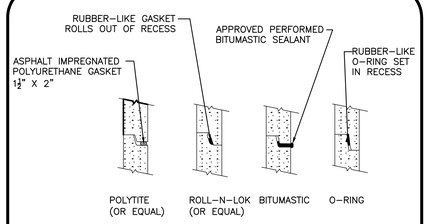

NOTES:
1. HORIZONTAL JOINTS BETWEEN SECTIONS OF PRECAST CONCRETE BARRELS SHALL BE OF A TYPE APPROVED BY THE ENGINEER, WHICH TYPE SHALL, IN GENERAL, DEPEND FOR WATER TIGHTNESS UPON AN ELASTOMERIC OR MASTIC-LIKE GASKET.
2. ALL GASKETS AND SEALANTS SHALL BE INSTALLED IN ACCORDANCE WITH MANUFACTURER'S WRITTEN INSTRUCTIONS.
3. FOR BITUMASTIC TYPE JOINTS THE AMOUNT OF SEALANT SHALL BE SUFFICIENT TO FILL AT LEAST 75% OF THE JOINT CAVITY.

SEWER MANHOLE JOINTING METHOD (3)
NOT TO SCALE

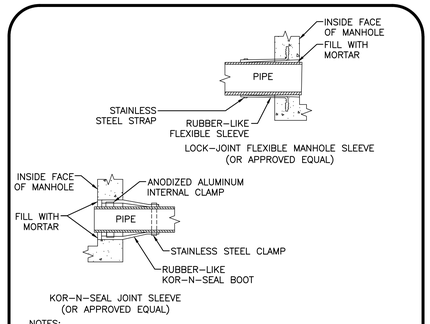

NOTES:
1. PIPE TO MANHOLE JOINTS SHALL BE ONLY AS APPROVED BY THE ENGINEER AND IN GENERAL, WILL DEPEND FOR WATER TIGHTNESS UPON ELASTOMETRIC SEALANT
2. NON-SHRINKING MORTAR SHALL ONLY BE USED WHERE SPECIFICALLY APPROVED BY THE ENGINEER.

PIPE CONNECTIONS TO SEWER MANHOLE (4)
NOT TO SCALE

MANHOLES SHALL HAVE A BRICK PAVED SHELF AND INVERT, CONSTRUCTED TO CONFORM TO THE SIZE OF PIPE AND FLOW. AT CHANGES IN DIRECTION, THE INVERTS SHALL BE LAID OUT IN CURVES OF THE LONGEST RADIUS POSSIBLE TANGENT TO THE CENTER LINE OF THE HIGHEST PIPE CROWN AND SLOPE TO DRAIN TOWARD THE FLOW THROUGH CHANNEL.

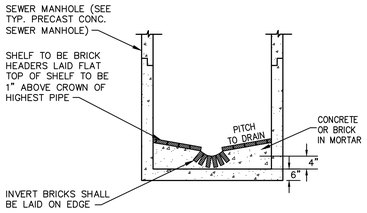

NOTE:
INVERT & SHELF TO BE PLACED AFTER LEAKAGE TEST

TYPICAL BRICK INVERT SECTION FOR SEWER MANHOLES (5)
NOT TO SCALE

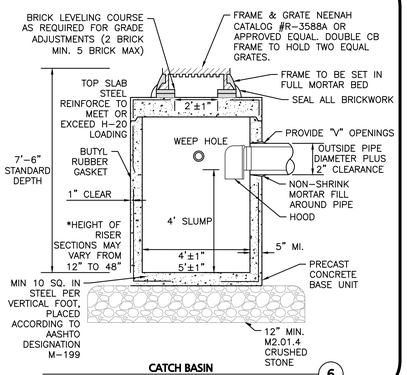

CATCH BASIN (6)
NOT TO SCALE

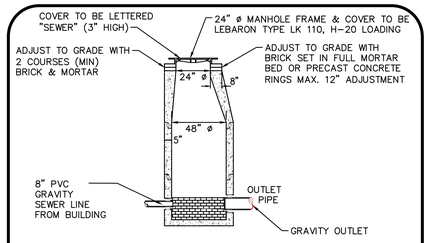

NOTE:
THE MANHOLE, INCLUDING ALL COMPONENT PARTS, SHALL HAVE ADEQUATE SPACE, STRENGTH AND LEAK PROOF QUALITIES CONSIDERED NECESSARY FOR THE INTENDED SERVICE SPACE REQUIREMENT AND CONFIGURATIONS SHALL BE AS SHOWN ON THE DRAWING. MANHOLES MAY BE AN ASSEMBLY OR PRECAST SECTIONS, WITH OR WITHOUT STEEL REINFORCEMENT, WITH ADEQUATE JOINTING OR CONCRETE CAST MONOLITHICALLY IN PLACE WITH OR WITHOUT REINFORCEMENT. IN ANY APPROVED MANHOLE, THE COMPLETE STRUCTURE SHALL BE OF SUCH MATERIAL AND QUALITY AS TO WITHSTAND LOADS OF 8 TONS (H-20 LOADING) WITHOUT FAILURE AND PREVENT LEAKAGE IN EXCESS OF ONE GALLON PER DAY PER VERTICAL FOOT OF MANHOLE.

PRECAST CONCRETE SEWER MANHOLE (7)
NOT TO SCALE

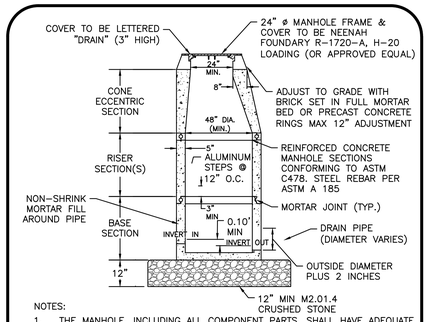

NOTES:
1. THE MANHOLE, INCLUDING ALL COMPONENT PARTS, SHALL HAVE ADEQUATE SPACE AND STRENGTH QUALITIES CONSIDERED NECESSARY FOR THE INTENDED SERVICE. SPACE REQUIREMENT AND CONFIGURATIONS SHALL BE AS SHOWN ON THE DRAWING. THE COMPLETE STRUCTURE SHALL BE OF SUCH MATERIAL AND QUALITY AS TO WITHSTAND (H-20 LOADING) WITHOUT FAILURE.

VERTICAL FOOT OF MANHOLE.

PRECAST DRAIN MANHOLE (8)
NOT TO SCALE

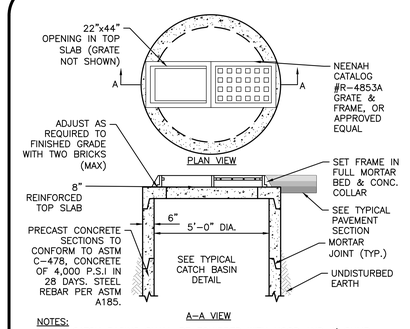

NOTES:
1. ALL CATCH BASINS SHALL BE EQUIPPED WITH HOOD AND 4' SUMP.
2. ALL FRAMES, GRATES AND PRECAST UNITS SHALL BE CERTIFIED FOR H-20 LOADING BY THE RESPECTIVE MANUFACTURER.

DOUBLE GRATE CATCH BASIN (9)
NOT TO SCALE

DETAIL NOT USED (10)
NOT TO SCALE

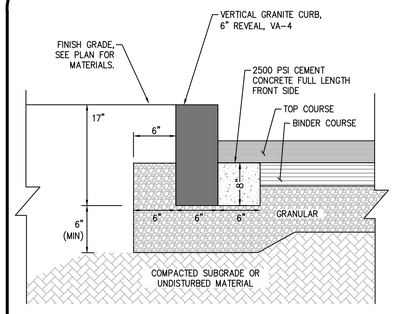

VERTICAL GRANITE CURBING (VGC) (11)
NOT TO SCALE

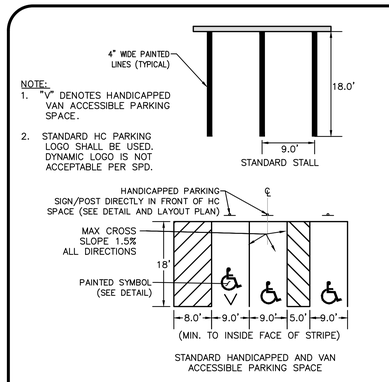

NOTE:
1. "V" DENOTES HANDICAPPED VAN ACCESSIBLE PARKING SPACE.
2. STANDARD HC PARKING LOGO SHALL BE USED. DYNAMIC LOGO IS NOT ACCEPTABLE PER SPD.

HANDICAP AND STANDARD PARKING STRIPING (12)
NOT TO SCALE

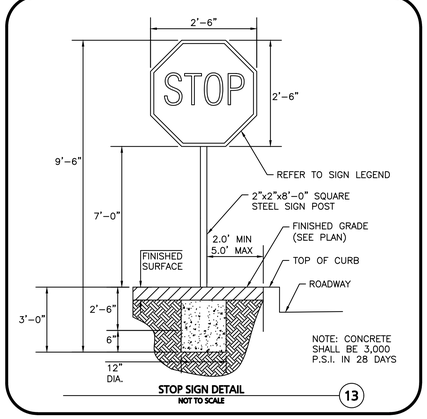

STOP SIGN DETAIL (13)
NOT TO SCALE

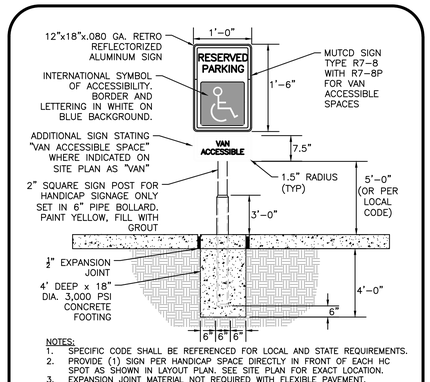

NOTES:
1. SPECIFIC CODE SHALL BE REFERENCED FOR LOCAL AND STATE REQUIREMENTS.
2. PROVIDE (1) SIGN PER HANDICAP SPACE DIRECTLY IN FRONT OF EACH HC SPOT AS SHOWN IN LAYOUT PLAN. SEE SITE PLAN FOR EXACT LOCATION.
3. EXPANSION JOINT MATERIAL NOT REQUIRED WITH FLEXIBLE PAVEMENT.

ADA ACCESSIBLE PARKING / TRAFFIC CONTROL SIGNAGE (14)
NOT TO SCALE

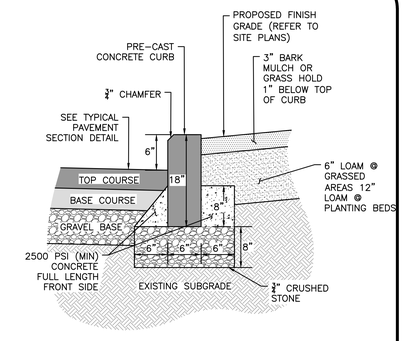

PRE-CAST CONCRETE CURB (PCC) (10)
NOT TO SCALE

DESC.	SIGN	SIZE	MOUNTING HEIGHT	DESCRIPTION	REFLEC-TORIZED
R1-1	STOP	30"x30"	7' - 0"	WHITE ON RED	YES
N/A	RIDE SHARE PARKING ONLY	18" x 24"	7' - 0"	GREEN ON WHITE	YES
W11-2		36" x 36"	7' - 0"	BLACK ON YELLOW	YES
W16-7P		24" x 12"	UNDER W11-2	BLACK ON YELLOW	YES

SIGN TABLE (15)
NOT TO SCALE

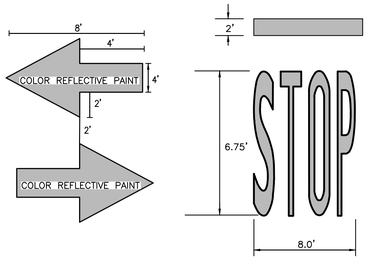

WHITE THERMOPLASTIC LETTERING AND ARROWS (16)
NOT TO SCALE

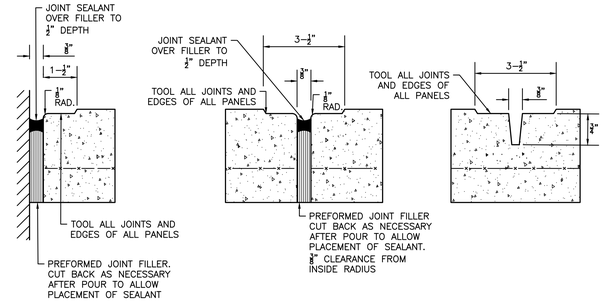

NOTES:
1. PROVIDE EXPANSION JOINTS AT MIN. 15' O.C. MIN.
2. PROVIDE CONTROL JOINTS AT 5' O.C. UNLESS SHOWN OTHERWISE.
3. PROVIDE BROOM FINISH IN DIRECTION PERPENDICULAR TO DIRECTION OF TRAVEL.
4. CEMENT CONCRETE SHALL BE 4,500 PSI AIR ENTRAINED.
5. REFER TO LANDSCAPING PLANS FOR ADDITIONAL JOINTS.
6. JOINT FILLERS SHALL BE RESILIENT PREMOLDED BITUMINOUS IMPREGNATED FIBERBOARD. SUBMIT SHOP DRAWINGS.
7. JOINT SEALANTS SHALL BE NON-PRIMING POURABLE SELF-LEVELING TYPE. SUBMIT SHOP DRAWINGS.
8. ALL CURBS TO HAVE 3/4" EXPANSION JOINTS AT MAXIMUM 1OO FEET WITH DOWELS AND CONTROL JOINTS AT MAXIMUM 15 FEET

CONCRETE SIDEWALK JOINTS (17)
NOT TO SCALE

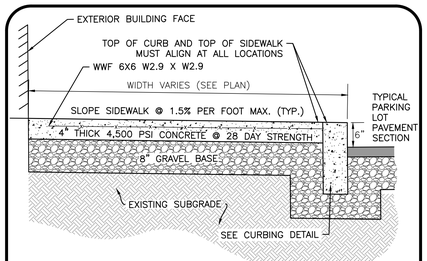

NOTES:
1. SIDEWALK TO HAVE TOOLED JOINTS IN A 5' x 5' (TYP.) GRID WITH EXPANSION JOINTS 15' ON CENTER AND PREMOLDED FILLER
2. TOOLED JOINT 6" FROM FACE OF CURB
3. SEE PLAN FOR ELEVATIONS AT CURB
4. SIDEWALK CROSS SLOPE TO BE 1.5% MAX & SIDEWALK LONGITUDINAL SLOPE TO BE 4.5% MAX, TYP.

CONCRETE SIDEWALK WITH CURB (18)
NOT TO SCALE

ISSUED FOR PERMITTING - NOT FOR CONSTRUCTION

COMMONWEALTH OF MASSACHUSETTS
4.30.24
CARLTON M. QUINN
CIVIL
No. 49923
REGISTERED PROFESSIONAL ENGINEER
PROFESSIONAL ENGINEER FOR ALLEN & MAJOR ASSOCIATES, INC.

REV	DATE	DESCRIPTION
1	2024-04-30	REVISED PER PEER REVIEW COMMENTS

APPLICANT\OWNER:
FELLSWAY DEVELOPMENT LLC
c/o THE GUTIERREZ CO.
200 SUMMIT DRIVE, SUITE 400
BURLINGTON, MA 01803

PROJECT:
THE RESIDENCES AT SPOT POND
MULTI-FAMILY HOUSING
5 WOODLAND ROAD
STONEHAM, MA 02180

PROJECT NO.	1145-01T	DATE:	2023-11-16
SCALE:	AS SHOWN	DWG. NAME:	C-1145-01T
DESIGNED BY:	DMR/MTB	CHECKED BY:	CMQ

PREPARED BY:
ALLEN & MAJOR ASSOCIATES, INC.
civil engineering ◆ land surveying
environmental consulting ◆ landscape architecture
www.allenmajor.com
100 COMMERCE WAY, SUITE 5
WOBURN MA 01801
TEL: (781) 935-6889
FAX: (781) 935-2896
WOBURN, MA ◆ LAKEVILLE, MA ◆ MANCHESTER, NH

THIS DRAWING HAS BEEN PREPARED IN DIGITAL FORMAT. CLIENT/CLIENT'S REPRESENTATIVE OR CONSULTANTS MAY BE PROVIDED COPIES OF DRAWINGS AND SPECIFICATIONS FOR HIS/HER INFORMATION AND/OR SPECIFIC USE ON THIS PROJECT. DUE TO THE POTENTIAL THAT THE PROVIDED INFORMATION MAY BE MODIFIED UNINTENTIONALLY OR OTHERWISE, ALLEN & MAJOR ASSOCIATES, INC. MAY REMOVE ALL INDICATION OF THE DOCUMENT'S AUTHORSHIP ON THE DIGITAL MEDIA. PRINTED REPRESENTATIONS OR PORTABLE DOCUMENT FORMAT OF THE DRAWINGS AND SPECIFICATIONS ISSUED SHALL BE THE ONLY RECORD COPIES OF ALLEN & MAJOR ASSOCIATES, INC.'S WORK PRODUCT.

DRAWING TITLE: DETAILS
SHEET No. C-502

Copyright©2024 Allen & Major Associates, Inc.
All Rights Reserved

N:\PROJECTS\1145-01T\CIVIL\DRAWINGS\CURRENT\C-1145-01T - DETAILS.DWG

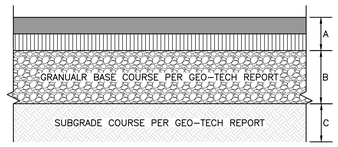

NOTES:

1. COMPACT SOIL SUBGRADE UNIFORMLY TO AT LEAST 95 PERCENT OF ASTM D1557 LABORATORY DENSITY.
2. PROOF-ROLL PREPARED SUBGRADE TO IDENTIFY SIFT POCKETS AND AREAS OF EXCESS YIELDING. EXCAVATE SOFT SPOTS, UNSATISFACTORY SOILS, AND AREAS OF EXCESSIVE PUMPING OR RUTTING, AS DETERMINED BY GEOTECHNICAL ENGINEER AND REPLACE WITH COMPACTED BACKFILL OR FILL AS DIRECTED.
3. CONTRACTOR SHALL COORDINATE SURFACE, BINDER, BASE, AND SUBBASE COURSES WITH GEOTECHNICAL OR SOILS REPORT. REFER TO REPORT FOR RECOMMENDATIONS FOR LOCAL SOILS OR DRAINAGE CONDITIONS AND/OR METHODS.
4. BASE COURSE SHALL EXTEND 6 INCHES BEYOND PAVEMENT EDGE WHERE PAVEMENT DOES NOT ABUT CURB, WALL, STEPS, OR FIXED OBJECT.
5. PAVEMENT EDGES SHALL BE TAMPED WHERE PAVEMENT DOES NOT ABUT CURB, WALL, STEPS, OR FIXED OBJECT.
6. ALL AGGREGATE FILL SHALL CONFORM WITH TABLE IV AND TABLE V OF THE REPORT ENTITLED "GEOTECHNICAL ENGINEERING REPORT" PREPARED BY MCGARDLE, GANNON ASSOCIATES, INC. DATED JULY 20, 2018.

GENERAL DUTY PAVING (17" PROFILE)
A= 1.5" ASPHALT CONCRETE – SURFACE COURSE (TOP COURSE)
1.5" ASPHALT CONCRETE – BINDER COURSE

B= 4" DENSE GRADED AGGREGATE COURSE

C= 10" SAND & GRAVEL BASE COURSE (PROCESSED GRAVEL FOR SUBBASE)

HEAVY DUTY PAVING – (20.5" PROFILE)
A= 2" ASPHALT CONCRETE – SURFACE COURSE (TOP COURSE)
2.5" ASPHALT CONCRETE – BINDER COURSE

B= 4" DENSE GRADED AGGREGATE COURSE

C= 12" SAND & GRAVEL BASE COURSE

GENERAL & HEAVY DUTY BITUMINOUS PAVEMENT
NOT TO SCALE (1)

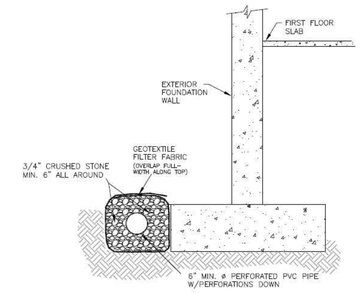

BUILDING FOUNDATION DRAIN DETAIL
NOT TO SCALE (2)

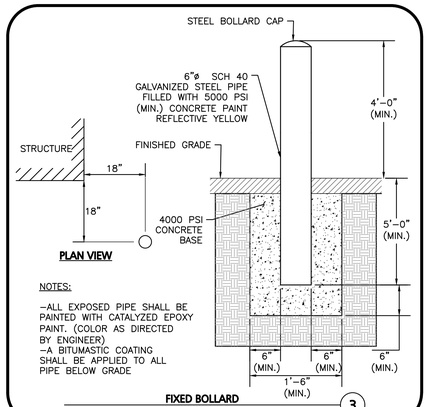

NOTES:
–ALL EXPOSED PIPE SHALL BE PAINTED WITH CATALYZED EPOXY PAINT. (COLOR AS DIRECTED BY ENGINEER)
–A BITUMASTIC COATING SHALL BE APPLIED TO ALL PIPE BELOW GRADE

FIXED BOLLARD
NOT TO SCALE (3)

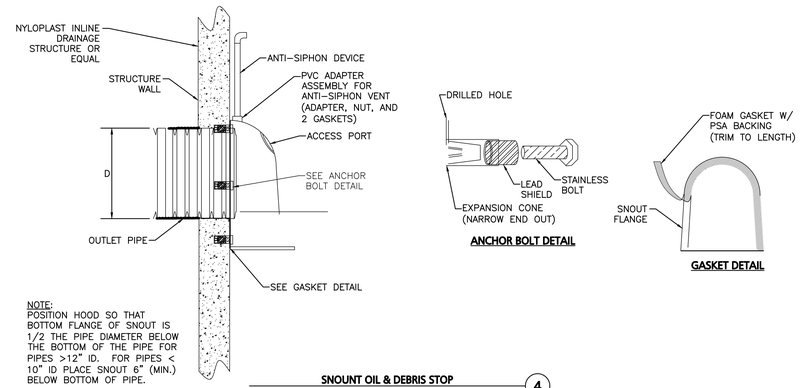

NOTE:
POSITION HOOD SO THAT BOTTOM FLANGE OF SNOUT IS 1/2 THE PIPE DIAMETER BELOW THE BOTTOM OF THE PIPE FOR PIPES >12" ID. FOR PIPES < 10" ID PLACE SNOUT 6" (MIN.) BELOW BOTTOM OF PIPE.

SNOUNT OIL & DEBRIS STOP
NOT TO SCALE (4)

NOTE:
TACK COAT – PROVIDE EMULSIFIED ASPHALT WHICH CONFORMS TO THE REQUIREMENTS OF THE STATE SPECIFICATIONS, DILUTED WITH ONE PART WATER TO ONE ONE PART ASPHALT FOLLOWING AASHTO M140/ASTM D997, OR AASHTO M208/ASTM D2397, SS-1H, CSS-1, OR CSS-1H.

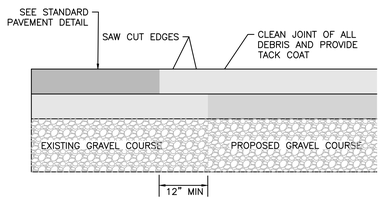

PAVEMENT KEY CUT
NOT TO SCALE (6)

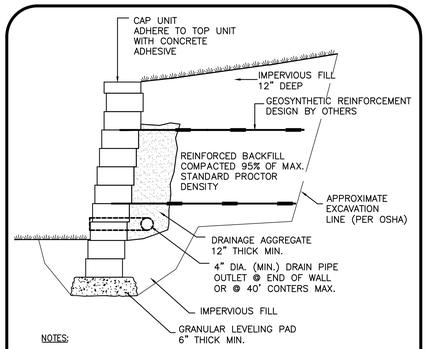

NOTES:
1. DESIGN OF PRECAST CONCRETE MODULAR BLOCK RETAINING WALLS SHALL BE BY A PROFESSIONAL STRUCTURAL ENGINEER REGISTERED IN THE COMMONWEALTH OF MASSACHUSETTS.

TYPICAL SEGMENTAL BLOCK RETAINING WALL
NOT TO SCALE (7)

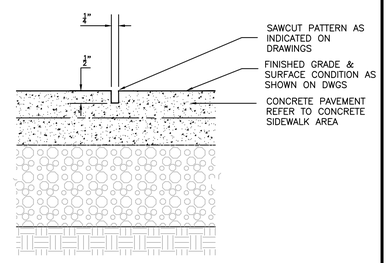

TYPICAL CONCRETE SAWCUT JOINT CONTROL
NOT TO SCALE (8)

DETAIL NOT USED
NOT TO SCALE (9)

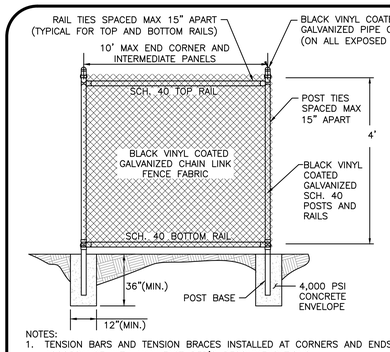

NOTES:
1. TENSION BARS AND TENSION BRACES INSTALLED AT CORNERS AND ENDS IN ACCORDANCE WITH MANUFACTURER'S RECOMMENDATIONS.
2. CONTRACTOR TO SUBMIT SHOP DRAWINGS FOR REVIEW PRIOR TO PURCHASE OF MATERIALS.

4' HIGH BLACK VINYL COATED CHAIN LINK FENCE
NOT TO SCALE (10)

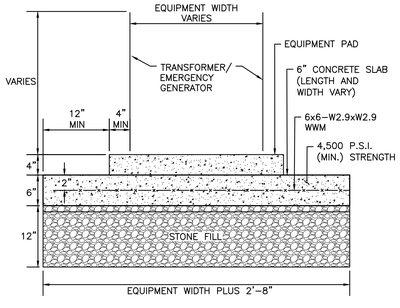

NOTE:
REFERENCE MECHANICAL ENGINEER'S PLANS FOR ANY PIPE, CONDUIT AND GROUND WIRE LOCATIONS

TRANSFORMER/ GENERATOR PAD DETAIL
NOT TO SCALE (11)

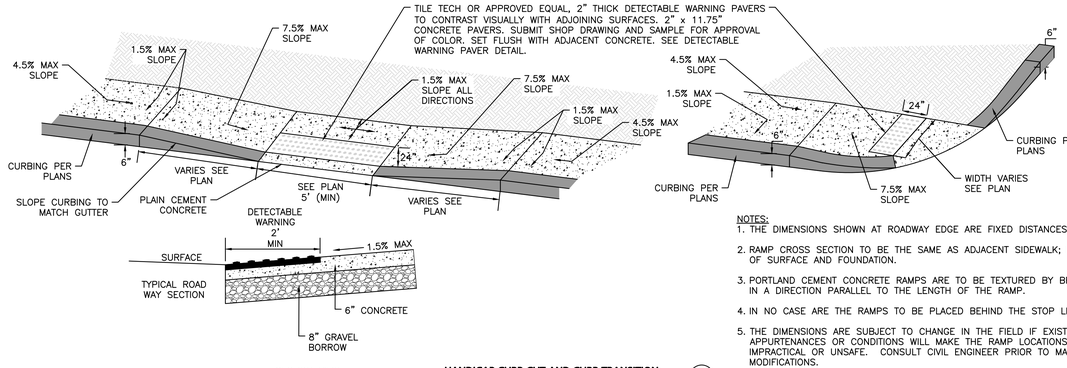

NOTES:
1. THE DIMENSIONS SHOWN AT ROADWAY EDGE ARE FIXED DISTANCES.
2. RAMP CROSS SECTION TO BE THE SAME AS ADJACENT SIDEWALK; I.E. DEPTH OF SURFACE AND FOUNDATION.
3. PORTLAND CEMENT CONCRETE RAMPS ARE TO BE TEXTURED BY BROOMING IN A DIRECTION PARALLEL TO THE LENGTH OF THE RAMP.
4. IN NO CASE ARE THE RAMPS TO BE PLACED BEHIND THE STOP LINE.
5. THE DIMENSIONS ARE SUBJECT TO CHANGE IN THE FIELD IF EXISTING APPURTENANCES OR CONDITIONS WILL MAKE THE RAMP LOCATIONS IMPRACTICAL OR UNSAFE. CONSULT CIVIL ENGINEER PRIOR TO MAKING ANY MODIFICATIONS.

HANDICAP CURB CUT AND CURB TRANSITION
NOT TO SCALE (12)

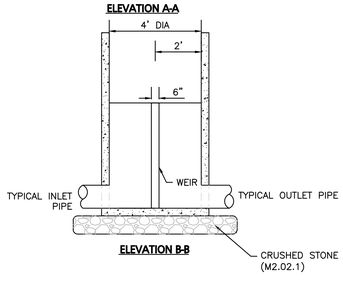

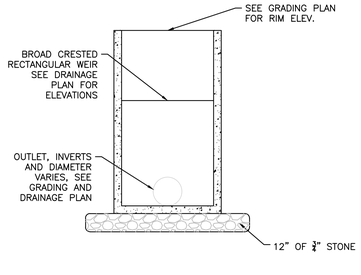

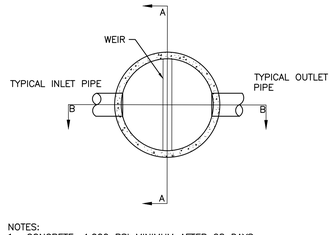

NOTES:
1. CONCRETE: 4,000 PSI MINIMUM AFTER 28 DAYS.
2. ALL REINFORCEMENT PER ASTM C1227-93.
3. TONGUE & GROOVE JOINT SEALED WITH BUTYLE RESIN OR MASTIC.
4. WALLS ARE TO BE 6" THICK & BOTTOM TO BE 8" THICK.
5. PROVIDE 4' SUMP.
6. SEE GRADING AND DRAINAGE PLAN FOR RIM, INVERT AND WEIR ELEVATIONS, MATERIAL AND MORE INFORMATION.
7. OCS SHALL BE EQUIPPED WITH SLUICE GATE AND IS SUBJECT TO CHANGE

NOT FOR CONSTRUCTION

TYPICAL OUTLET CONTROL STRUCTURE DETAIL
NOT TO SCALE (13)

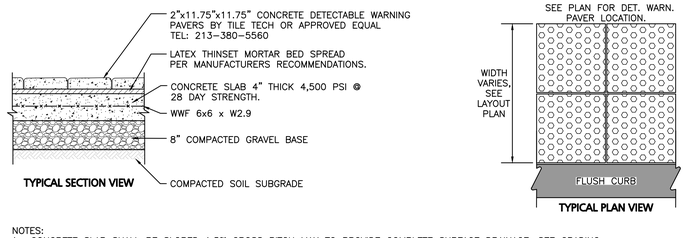

NOTES:
1. CONCRETE SLAB SHALL BE SLOPED 1.5% CROSS PITCH MAX TO PROVIDE COMPLETE SURFACE DRAINAGE. SEE GRADING PLAN & HANDICAP CURB CUT / CURB TRANSISTION DETAIL.
2. SLAB TO HAVE STEEL TROWEL AND FINE BROOM FINISH. DO NOT USE CURING COMPOUNDS. CONTRACTOR TO ADD EXPANSION JOINTS AND PREMOLDED FILLER AT EDGE OF TILES AND ADJACENT MATERIAL.
3. SET TILES FLUSH WITH ADJACENT MATERIALS.
4. SUBMIT SHOP DRAWINGS OF TILES AND SAMPLE FOR APPROVAL OF COLOR TO OWNER / ARCH.
5. INSTALL DETECTABLE WARNING PAVERS PER MANUFACTURER'S RECOMMENDATIONS OR DESIGN ENGINEER.
6. ALL DET. WARN. PAVERS SHALL COMPLY WITH ADA REGULATIONS.

DETECTABLE WARNING PAVERS
NOT TO SCALE (14)

ISSUED FOR PERMITTING - NOT FOR CONSTRUCTION

COMMONWEALTH OF MASSACHUSETTS
4.30.24
CARLTON M. QUINN
CIVIL
No.49923
REGISTERED PROFESSIONAL ENGINEER
PROFESSIONAL ENGINEER FOR ALLEN & MAJOR ASSOCIATES, INC.

REV	DATE	DESCRIPTION
1	2024-04-30	REVISED PER PEER REVIEW COMMENTS

APPLICANT\OWNER:
FELLSWAY DEVELOPMENT LLC
c/o THE GUTIERREZ CO.
200 SUMMIT DRIVE, SUITE 400
BURLINGTON, MA 01803

PROJECT:
THE RESIDENCES AT SPOT POND
MULTI-FAMILY HOUSING
5 WOODLAND ROAD
STONEHAM, MA 02180

PROJECT NO.	1145-01T	DATE:	2023-11-16
SCALE:	AS SHOWN	DWG. NAME:	C-1145-01T
DESIGNED BY:	DMR/MTB	CHECKED BY:	CMQ

PREPARED BY:
ALLEN & MAJOR ASSOCIATES, INC.
civil engineering ◆ land surveying
environmental consulting ◆ landscape architecture
www.allenmajor.com
100 COMMERCE WAY, SUITE 5
WOBURN MA 01801
TEL: (781) 935-6889
FAX: (781) 935-2896
WOBURN, MA ◆ LAKEVILLE, MA ◆ MANCHESTER, NH

THIS DRAWING HAS BEEN PREPARED IN DIGITAL FORMAT. CLIENT/CLIENT'S REPRESENTATIVE OR CONSULTANTS MAY BE PROVIDED COPIES OF DRAWINGS AND SPECIFICATIONS FOR HIS/HER INFORMATION AND/OR SPECIFIC USE ON THIS PROJECT. DUE TO THE POTENTIAL THAT THE PROVIDED INFORMATION MAY BE MODIFIED UNINTENTIONALLY OR OTHERWISE, ALLEN & MAJOR ASSOCIATES, INC. MAY REMOVE ALL INDICATION OF THE DOCUMENTS AUTHORSHIP ON THE DIGITAL MEDIA. PRINTED REPRESENTATIONS OR PORTABLE DOCUMENT FORMAT OF THE DRAWINGS AND SPECIFICATIONS ISSUED SHALL BE THE ONLY RECORD COPIES OF ALLEN & MAJOR ASSOCIATES, INC.'S WORK PRODUCT.

DRAWING TITLE: DETAILS
SHEET No. C-503

Copyright©2024 Allen & Major Associates, Inc.
All Rights Reserved

N:\PROJECTS\1145-01T\CIVIL\DRAWINGS\CURRENT\C-1145-01T - DETAILS.DWG

NOT USED
NOT TO SCALE
1

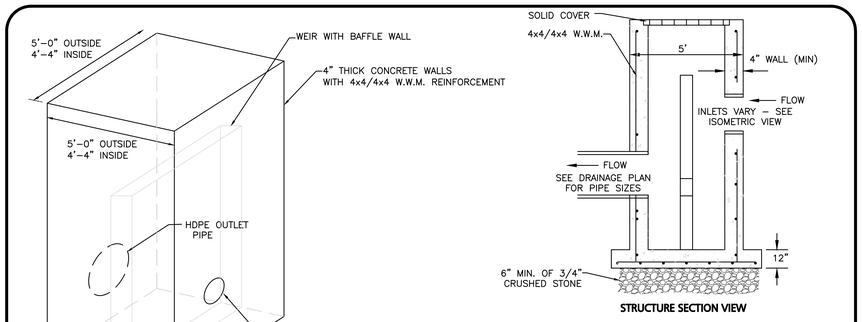

ISOMETRIC VIEW

STRUCTURE SECTION VIEW

NOTES:
1. CONTRACTOR TO PROVIDE SHOP DRAWING FOR APPROVAL PRIOR TO PURCHASE AND INSTALLATION.

2. TRASH RACK TO BE INSTALLED OVER ALL INLETS.

TYPICAL OUTLET CONTROL STRUCTURE
NOT TO SCALE
2

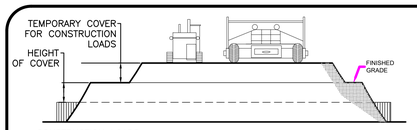

CONSTRUCTION LOADS

FOR TEMPORARY CONSTRUCTION VEHICLE LOADS, AN EXTRA AMOUNT OF COMPACTED COVER MAY BE REQUIRED OVER THE TOP OF THE PIPE. THE HEIGHT-OF-COVER SHALL MEET THE MINIMUM REQUIREMENTS SHOWN IN THE TABLE BELOW. THE USE OF HEAVY CONSTRUCTION EQUIPMENT NECESSITATES GREATER PROTECTION FOR THE PIPE THAN FINISHED GRADE COVER MINIMUMS FOR NORMAL HIGHWAY TRAFFIC.

PIPE SPAN (INCHES)	AXLE LOADS (kips)			
	18-50	50-75	75-110	110-150
	MINIMUM COVER (FT)			
12-42	2.0	2.5	3.0	3.0
48-72	3.0	3.0	3.5	4.0
78-120	3.0	3.5	4.0	4.0
126-144	3.5	4.0	4.5	4.5

*MINIMUM COVER MAY VARY, DEPENDING ON LOCAL CONDITIONS. THE CONTRACTOR MUST PROVIDE THE ADDITIONAL COVER REQUIRED TO AVOID DAMAGE TO THE PIPE. MINIMUM COVER IS MEASURED FROM THE TOP OF THE PIPE TO THE TOP OF THE MAINTAINED CONSTRUCTION ROADWAY SURFACE.

SPECIFICATION FOR CORRUGATED STEEL PIPE-ALUMINIZED TYPE 2 STEEL

SCOPE

THIS SPECIFICATION COVERS THE MANUFACTURE AND INSTALLATION OF THE CORRUGATED STEEL PIPE (CSP) DETAILED IN THE PROJECT PLANS.

MATERIAL

THE ALUMINIZED TYPE 2 STEEL COILS SHALL CONFORM TO THE APPLICABLE REQUIREMENTS OF AASHTO M274 OR ASTM A929.

PIPE

THE CSP SHALL BE MANUFACTURED IN ACCORDANCE WITH THE APPLICABLE REQUIREMENTS OF AASHTO M36 OR ASTM A760. THE PIPE SIZES, GAGES AND CORRUGATIONS SHALL BE AS SHOWN ON THE PROJECT PLANS.

ALL FABRICATION OF THE PRODUCT SHALL OCCUR WITHIN THE UNITED STATES.

HANDLING AND ASSEMBLY

SHALL BE IN ACCORDANCE WITH RECOMMENDATIONS OF THE NATIONAL CORRUGATED STEEL PIPE ASSOCIATION (NCSPA)

INSTALLATION

SHALL BE IN ACCORDANCE WITH AASHTO STANDARD SPECIFICATIONS FOR HIGHWAY BRIDGES, SECTION 26, DIVISION II OR ASTM A798 AND IN CONFORMANCE WITH THE PROJECT PLANS AND SPECIFICATIONS. IF THERE ARE ANY INCONSISTENCIES OR CONFLICTS THE CONTRACTOR SHOULD DISCUSS AND RESOLVE WITH THE SITE ENGINEER.

IT IS ALWAYS THE RESPONSIBILITY OF THE CONTRACTOR TO FOLLOW OSHA GUIDELINES FOR SAFE PRACTICES.

CONSTRUCTION LOADING DIAGRAM
NOT TO SCALE
3

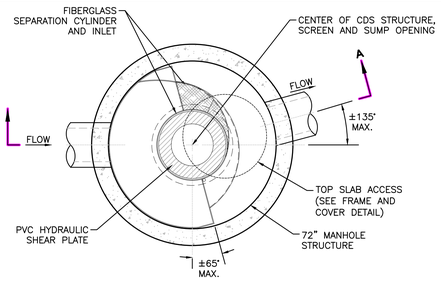

PLAN VIEW B-B
N.T.S.

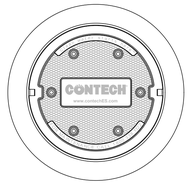

FRAME AND COVER
(DIAMETER VARIES)
N.T.S.

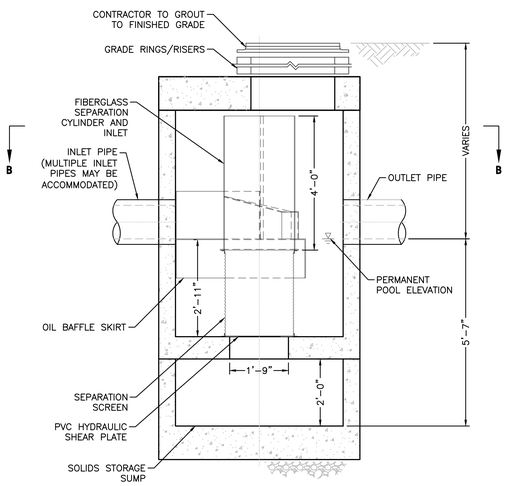

ELEVATION VIEW A-A
N.T.S.

NOTES:
1. CONTECH TO PROVIDE ALL MATERIALS UNLESS NOTED OTHERWISE.

2. STURCTURE SHALL MEET AASHTO HS20 LOAD RATING. CASTINGS SHALL MEET AASHTO M306 AND BE CAST WITH THE CONTECH LOGO.

3. CDS STRUCTURE SHALL BE PRECAST CONCRETE CONFORMING TO ASTM C-478 AND AASHTO LOAD FACTOR DESIGN METHOD.

4. CONTRACTOR SHALL SUBMIT SHOP DRAWINGS FOR DESIGN ENGINEER REVIEW AND APPROVAL PRIOR TO INSTALLATION

5. SEE DRAINAGE PLAN FOR LOCATIONS AND RIM AND INVERT INFORMATION.

6. WATER QUALITY UNIT CONTECH MODEL CDS3030-6-C APPROVED EQUAL.

CONTECH CDS3030-6-C WATER QUALITY UNIT (OR APPROVED EQUAL)
NOT TO SCALE
4

ACCEPTABLE FILL MATERIALS: STORMTECH MC-4500 CHAMBER SYSTEMS

MATERIAL LOCATION		DESCRIPTION	AASHTO MATERIAL CLASSIFICATIONS	COMPACTION / DENSITY REQUIREMENT
D	**FINAL FILL:** FILL MATERIAL FOR LAYER 'D' STARTS FROM THE TOP OF THE 'C' LAYER TO THE BOTTOM OF FLEXIBLE PAVEMENT OR UNPAVED FINISHED GRADE ABOVE. NOTE THAT PAVEMENT SUBBASE MAY BE PART OF THE 'D' LAYER	ANY SOIL/ROCK MATERIALS, NATIVE SOILS, OR PER ENGINEER'S PLANS. CHECK PLANS FOR PAVEMENT SUBGRADE REQUIREMENTS.	N/A	PREPARE PER SITE DESIGN ENGINEER'S PLANS. PAVED INSTALLATIONS MAY HAVE STRINGENT MATERIAL AND PREPARATION REQUIREMENTS.
C	**INITIAL FILL:** FILL MATERIAL FOR LAYER 'C' STARTS FROM THE TOP OF THE EMBEDMENT STONE ('B' LAYER) TO 24" (600 mm) ABOVE THE TOP OF THE CHAMBER. NOTE THAT PAVEMENT SUBBASE MAY BE A PART OF THE 'C' LAYER.	GRANULAR WELL-GRADED SOIL/AGGREGATE MIXTURES, <35% FINES OR PROCESSED AGGREGATE. MOST PAVEMENT SUBBASE MATERIALS CAN BE USED IN LIEU OF THIS LAYER.	AASHTO M145[1] A-1, A-2-4, A-3 OR AASHTO M43[1] 3, 357, 4, 467, 5, 56, 57, 6, 67, 68, 7, 78, 8, 89, 9, 10	BEGIN COMPACTIONS AFTER 24" (600 mm) OF MATERIAL OVER THE CHAMBERS IS REACHED. COMPACT ADDITIONAL LAYERS IN 12" (300 mm) MAX. LIFTS TO A MIN. 95% PROCTOR DENSITY FOR WELL GRADED MATERIAL AND 95% RELATIVE DENSITY FOR PROCESSED AGGREGATE MATERIALS.
B	**EMBEDMENT STONE:** FILL SURROUNDING THE CHAMBERS FROM THE FOUNDATION STONE ('A' LAYER) TO THE 'C' LAYER ABOVE.	CLEAN, CRUSHED, ANGULAR STONE	AASHTO M43[1] 3, 4	NO COMPACTION REQUIRED.
A	**FOUNDATION STONE:** FILL BELOW CHAMBERS FROM THE SUBGRADE UP TO THE FOOT (BOTTOM) OF THE CHAMBER.	CLEAN, CRUSHED, ANGULAR STONE	AASHTO M43[1] 3, 4	PLATE COMPACT OR ROLL TO ACHIEVE A FLAT SURFACE.[2,3]

PLEASE NOTE:
1. THE LISTED AASHTO DESIGNATIONS ARE FOR GRADATIONS ONLY. THE STONE MUST ALSO BE CLEAN, CRUSHED, ANGULAR. FOR EXAMPLE, A SPECIFICATION FOR #4 STONE WOULD STATE: "CLEAN, CRUSHED, ANGULAR NO. 4 (AASHTO M43) STONE".
2. STORMTECH COMPACTION REQUIREMENTS ARE MET FOR 'A' LOCATION MATERIALS WHEN PLACED AND COMPACTED IN 9" (230 mm) (MAX.) LIFTS USING TWO FULL COVERAGES WITH A VIBRATORY COMPACTOR.
3. WHERE INFILTRATION SURFACES MAY BE COMPROMISED BY COMPACTION, FOR STANDARD DESIGN LOAD CONDITIONS, A FLAT SURFACE MAY BE ACHIEVED BY RAKING OR DRAGGING WITHOUT COMPACTION EQUIPMENT. FOR SPECIAL LOAD DESIGNS, CONTACT STORMTECH FOR COMPACTION REQUIREMENTS.
4. ONCE LAYER 'C' IS PLACED, ANY SOIL/MATERIAL CAN BE PLACED IN LAYER 'D' UP TO THE FINISHED GRADE. MOST PAVEMENT SUBBASE SOILS CAN BE USED TO REPLACE THE MATERIAL REQUIREMENTS OF LAYER 'C' OR 'D' AT THE SITE DESIGN ENGINEER'S DISCRETION.

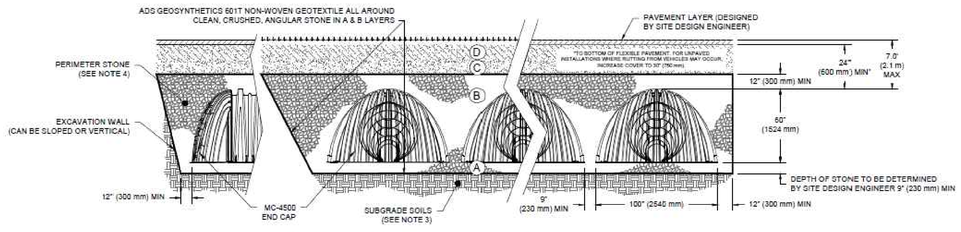

*FOR COVER DEPTHS GREATER THAN 7.0' (2.1 m) PLEASE CONTACT STORMTECH

NOTES:

1. CHAMBERS SHALL MEET THE REQUIREMENTS OF ASTM F2418-16a, "STANDARD SPECIFICATION FOR POLYPROPYLENE (PP) CORRUGATED WALL STORMWATER COLLECTION CHAMBERS" CHAMBER CLASSIFICATION 60x101
2. MC-4500 CHAMBERS SHALL BE DESIGNED IN ACCORDANCE WITH ASTM F2787 "STANDARD PRACTICE FOR STRUCTURAL DESIGN OF THERMOPLASTIC CORRUGATED WALL STORMWATER COLLECTION CHAMBERS".
3. THE SITE DESIGN ENGINEER IS RESPONSIBLE FOR ASSESSING THE BEARING RESISTANCE (ALLOWABLE BEARING CAPACITY) OF THE SUBGRADE SOILS AND THE DEPTH OF FOUNDATION STONE WITH CONSIDERATION FOR THE RANGE OF EXPECTED SOIL MOISTURE CONDITIONS.
4. PERIMETER STONE MUST BE EXTENDED HORIZONTALLY TO THE EXCAVATION WALL FOR BOTH VERTICAL AND SLOPED EXCAVATION WALLS.
5. REQUIREMENTS FOR HANDLING AND INSTALLATION:
   - TO MAINTAIN THE WIDTH OF CHAMBERS DURING SHIPPING AND HANDLING, CHAMBERS SHALL HAVE INTEGRAL, INTERLOCKING STACKING LUGS.
   - TO ENSURE A SECURE JOINT DURING INSTALLATION AND BACKFILL, THE HEIGHT OF THE CHAMBER JOINT SHALL NOT BE LESS THAN 3".
   - TO ENSURE THE INTEGRITY OF THE ARCH SHAPE DURING INSTALLATION, a) THE ARCH STIFFNESS CONSTANT AS DEFINED IN SECTION 6.2.8 OF ASTM F2418 SHALL BE GREATER THAN OR EQUAL TO 500 LBS/IN/IN. AND b) TO RESIST CHAMBER DEFORMATION DURING INSTALLATION AT ELEVATED TEMPERATURES (ABOVE 73° F / 23° C), CHAMBERS SHALL BE PRODUCED FROM REFLECTIVE GOLD OR YELLOW COLORS.

ADS MC-4500 INFILTRATION CHAMBER SYSTEM
NOT TO SCALE
6

PROFESSIONAL ENGINEER FOR
ALLEN & MAJOR ASSOCIATES, INC.

REV	DATE	DESCRIPTION
1	2024-04-30	REVISED PER PEER REVIEW COMMENTS

APPLICANT\OWNER:
FELLSWAY DEVELOPMENT LLC
c/o THE GUTIERREZ CO.
200 SUMMIT DRIVE, SUITE 400
BURLINGTON, MA 01803

PROJECT:
THE RESIDENCES AT SPOT POND
MULTI-FAMILY HOUSING
5 WOODLAND ROAD
STONEHAM, MA 02180

PROJECT NO.	1145-01T	DATE:	2023-11-16
SCALE:	AS SHOWN	DWG. NAME:	C-1145-01T
DESIGNED BY:	DMR/MTB	CHECKED BY:	CMQ

PREPARED BY:
ALLEN & MAJOR ASSOCIATES, INC.
civil engineering ◆ land surveying
environmental consulting ◆ landscape architecture
www.allenmajor.com
100 COMMERCE WAY, SUITE 5
WOBURN, MA 01801
TEL: (781) 935-6889
FAX: (781) 935-2896
WOBURN, MA ◆ LAKEVILLE, MA ◆ MANCHESTER, NH

THIS DRAWING HAS BEEN PREPARED IN DIGITAL FORMAT. CLIENT/CLIENT'S REPRESENTATIVE OR CONSULTANTS MAY BE PROVIDED COPIES OF DRAWINGS AND SPECIFICATIONS FOR HIS/HER INFORMATION AND/OR SPECIFIC USE ON THIS PROJECT. DUE TO THE POTENTIAL THAT THE PROVIDED INFORMATION MAY BE MODIFIED UNINTENTIONALLY OR OTHERWISE, ALLEN & MAJOR ASSOCIATES, INC. MAY REMOVE ALL INDICATION OF THE DOCUMENT'S AUTHORSHIP ON THE DIGITAL MEDIA. PRINTED REPRESENTATIONS OR PORTABLE DOCUMENT FORMAT OF THE DRAWINGS AND SPECIFICATIONS ISSUED SHALL BE THE ONLY RECORD COPIES OF ALLEN & MAJOR ASSOCIATES, INC.'S WORK PRODUCT.

DRAWING TITLE: DETAILS

SHEET No. C-504

Copyright©2024 Allen & Major Associates, Inc.
All Rights Reserved

ISSUED FOR PERMITTING - NOT FOR CONSTRUCTION

N:\PROJECTS\1145-01T\CIVIL\DRAWINGS\CURRENT\C-1145-01T - DETAILS.DWG

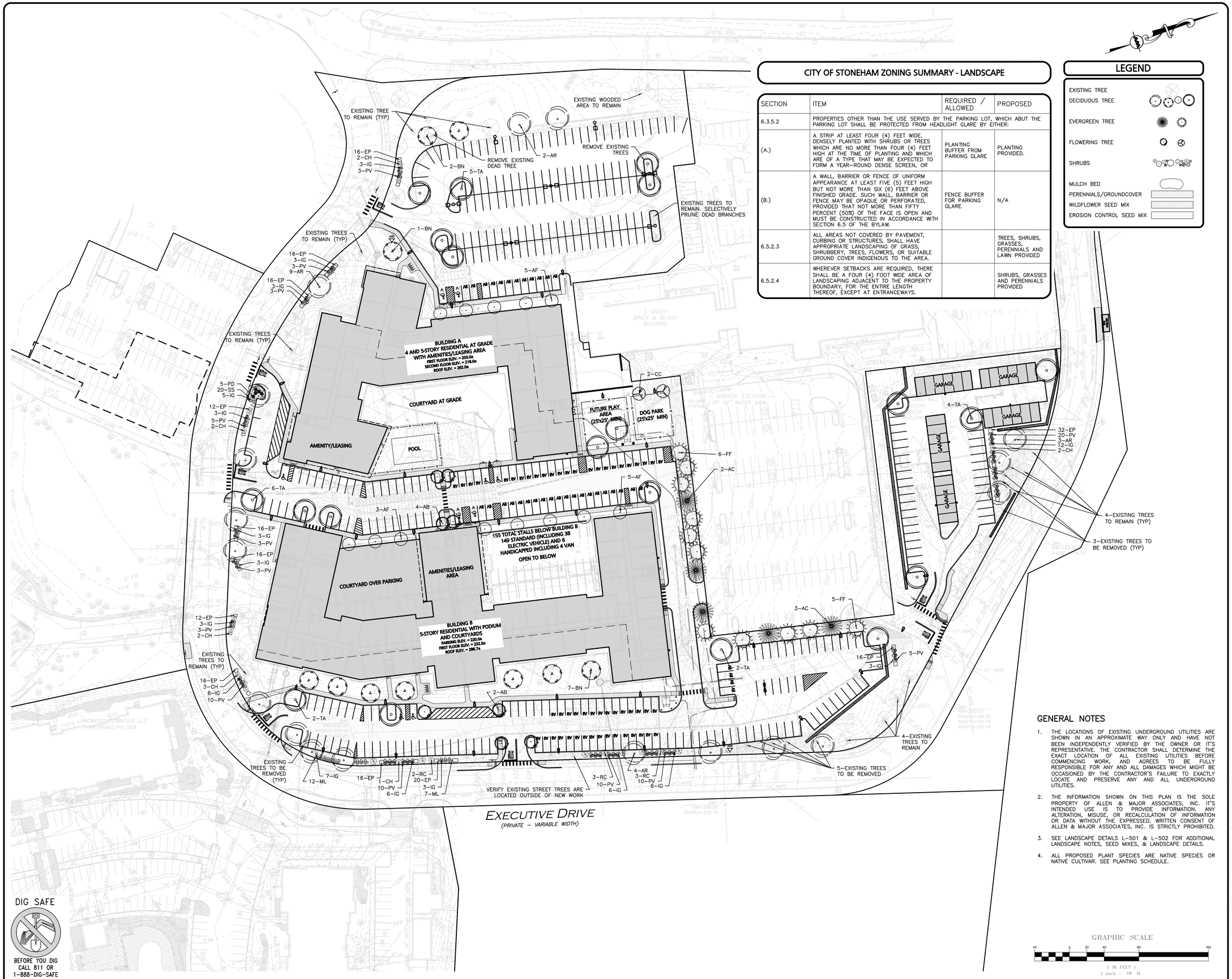

CITY OF STONEHAM ZONING SUMMARY - LANDSCAPE

SECTION	ITEM	REQUIRED / ALLOWED	PROPOSED
6.3.5.2	PROPERTIES OTHER THAN THE USE SERVED BY THE PARKING LOT, WHICH ABUT THE PARKING LOT SHALL BE PROTECTED FROM HEADLIGHT GLARE BY EITHER:		
(A.)	A STRIP AT LEAST FOUR (4) FEET WIDE, DENSELY PLANTED WITH SHRUBS OR TREES WHICH ARE NO MORE THAN FOUR (4) FEET HIGH AT THE TIME OF PLANTING AND WHICH ARE OF A TYPE THAT MAY BE EXPECTED TO FORM A YEAR–ROUND DENSE SCREEN, OR	PLANTING BUFFER FROM PARKING GLARE	PLANTING PROVIDED.
(B.)	A WALL, BARRIER OR FENCE OF UNIFORM APPEARANCE AT LEAST FIVE (5) FEET HIGH BUT NOT MORE THAN SIX (6) FEET ABOVE FINISHED GRADE. SUCH WALL, BARRIER OR FENCE MAY BE OPAQUE OR PERFORATED, PROVIDED THAT NOT MORE THAN FIFTY PERCENT (50%) OF THE FACE IS OPEN AND MUST BE CONSTRUCTED IN ACCORDANCE WITH SECTION 6.5 OF THE BYLAW.	FENCE BUFFER FOR PARKING GLARE	N/A
6.5.2.3	ALL AREAS NOT COVERED BY PAVEMENT, CURBING OR STRUCTURES, SHALL HAVE APPROPRIATE LANDSCAPING OF GRASS, SHRUBBERY, TREES, FLOWERS, OR SUITABLE GROUND COVER INDIGENOUS TO THE AREA.		TREES, SHRUBS, GRASSES, PERENNIALS AND LAWN PROVIDED
6.5.2.4	WHEREVER SETBACKS ARE REQUIRED, THERE SHALL BE A FOUR (4) FOOT WIDE AREA OF LANDSCAPING ADJACENT TO THE PROPERTY BOUNDARY, FOR THE ENTIRE LENGTH THEREOF, EXCEPT AT ENTRANCEWAYS.		SHRUBS, GRASSES AND PERENNIALS PROVIDED

LEGEND

- EXISTING TREE
- DECIDUOUS TREE
- EVERGREEN TREE
- FLOWERING TREE
- SHRUBS
- MULCH BED
- PERENNIALS/GROUNDCOVER
- WILDFLOWER SEED MIX
- EROSION CONTROL SEED MIX

GENERAL NOTES

1. THE LOCATIONS OF EXISTING UNDERGROUND UTILITIES ARE SHOWN IN AN APPROXIMATE WAY ONLY AND HAVE NOT BEEN INDEPENDENTLY VERIFIED BY THE OWNER OR IT'S REPRESENTATIVE. THE CONTRACTOR SHALL DETERMINE THE EXACT LOCATION OF ALL EXISTING UTILITIES BEFORE COMMENCING WORK, AND AGREES TO BE FULLY RESPONSIBLE FOR ANY AND ALL DAMAGES WHICH MIGHT BE OCCASIONED BY THE CONTRACTOR'S FAILURE TO EXACTLY LOCATE AND PRESERVE ANY AND ALL UNDERGROUND UTILITIES.
2. THE INFORMATION SHOWN ON THIS PLAN IS THE SOLE PROPERTY OF ALLEN & MAJOR ASSOCIATES, INC. IT'S INTENDED USE IS TO PROVIDE INFORMATION. ANY ALTERATION, MISUSE, OR RECALCULATION OF INFORMATION OR DATA WITHOUT THE EXPRESSED, WRITTEN CONSENT OF ALLEN & MAJOR ASSOCIATES, INC. IS STRICTLY PROHIBITED.
3. SEE LANDSCAPE DETAILS L–501 & L–502 FOR ADDITIONAL LANDSCAPE NOTES, SEED MIXES, & LANDSCAPE DETAILS.
4. ALL PROPOSED PLANT SPECIES ARE NATIVE SPECIES OR NATIVE CULTIVAR. SEE PLANTING SCHEDULE.

GRAPHIC SCALE

40 0 20 40 80 160

(IN FEET)
1 inch = 40 ft.

DIG SAFE

BEFORE YOU DIG
CALL 811 OR
1–888–DIG–SAFE
1–888–344–7233

N:\PROJECTS\1145-01T\CIVIL\DRAWINGS\CURRENT\L-1145-01T LANDSCAPE.DWG

ISSUED FOR PERMITTING - NOT FOR CONSTRUCTION

MASSACHUSETTS
Jacqueline B. Tyrrell
REGISTERED LANDSCAPE ARCHITECT
NO. 1525

04.30.2024

PROFESSIONAL LANDSCAPE ARCHITECT FOR ALLEN & MAJOR ASSOCIATES, INC.

REV	DATE	DESCRIPTION
1	2024-04-30	REVISED PER PEER REVIEW COMMENTS

APPLICANT\OWNER:
FELLSWAY DEVELOPMENT LLC
c/o THE GUTIERREZ CO.
200 SUMMIT DRIVE, SUITE 400
BURLINGTON, MA 01803

PROJECT:
THE RESIDENCES AT SPOT POND
MULTI-FAMILY HOUSING
5 WOODLAND ROAD
STONEHAM, MA 02180

PROJECT NO.	1145-01T	DATE:	2023-11-16
SCALE:	1" = 40'	DWG. NAME:	L-1145-01T
DESIGNED BY:	JBT	CHECKED BY:	CMQ

PREPARED BY:

ALLEN & MAJOR ASSOCIATES, INC.
civil engineering ◆ land surveying
environmental consulting ◆ landscape architecture
www.allenmajor.com
100 COMMERCE WAY, SUITE 5
WOBURN MA 01801
TEL: (781) 935-6889
FAX: (781) 935-2896
WOBURN, MA ◆ LAKEVILLE, MA ◆ MANCHESTER, NH

THIS DRAWING HAS BEEN PREPARED IN DIGITAL FORMAT. CLIENT/CLIENT'S REPRESENTATIVE OR CONSULTANTS MAY BE PROVIDED COPIES OF DRAWINGS AND SPECIFICATIONS FOR HIS/HER INFORMATION AND/OR SPECIFIC USE ON THIS PROJECT. DUE TO THE POTENTIAL THAT THE PROVIDED INFORMATION MAY BE MODIFIED UNINTENTIONALLY OR OTHERWISE, ALLEN & MAJOR ASSOCIATES, INC. MAY REMOVE ALL INDICATION OF THE DOCUMENT'S AUTHORSHIP ON THE DIGITAL MEDIA. PRINTED REPRESENTATIONS OR PORTABLE DOCUMENT FORMAT OF THE DRAWINGS AND SPECIFICATIONS ISSUED SHALL BE THE ONLY RECORD COPIES OF ALLEN & MAJOR ASSOCIATES, INC.'S WORK PRODUCT.

DRAWING TITLE: LANDSCAPE PLAN

SHEET No. L-101

Copyright©2024 Allen & Major Associates, Inc.
All Rights Reserved

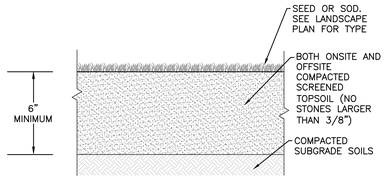

TEXTURE CLASS	% OF TOTAL WEIGHT
SAND	45% – 65%
SILT	15% – 35%
CLAY	5% – 20%

SIEVE	% PASSING
3/8"	100
NO. 4	85–100
NO. 40	60–85
NO. 100	38–60
NO. 200	28–40

NOTES:

1. TOP OF LOAM (TOPSOIL) IS FINISH GRADE.
2. ALL TOPSOIL (BOTH ONSITE AND OFFSITE SOURCES) SHALL BE COMPOSED OF A NATURAL, FERTILE, FRIABLE SOIL TYPICAL OF CULTIVATED TOPSOILS OF THE LOCALITY. SOIL SHALL BE SUITABLE FOR THE GERMINATION OF SEEDS AND SUPPORT OF VEGETATIVE GROWTH, WITH ADDITIVES, IF REQUIRED, TO ACHIEVE PARTICLE DISTRIBUTION AND ORGANIC CONTENT BELOW. TOPSOIL SHALL BE TAKEN FROM A WELL–DRAINED, ARIABLE SITE, FREE OF SUBSOIL, LARGE STONES, EARTH CLODS, STICKS, TRASH, STUMPS, CLAY LUMPS, ROOTS, OTHER OBJECTIONABLE, EXTRANEOUS MATTER OR DEBRIS NOR CONTAIN TOXIC SUBSTANCES.
3. THE CONTRACTOR SHALL PROVIDE THE OWNER / LANDSCAPE ARCHITECT WITH TOPSOIL TEST RESULTS (RECOMMEND UMASS AMHERST SOIL TESTING LAB) FOR APPROVAL PRIOR TO OBTAINING AND PLACING THE SOIL. IF THE PLANTING SOIL (BOTH ONSITE AND OFFSITE SOURCES) DOES NOT FALL WITHIN THE REQUIRED SIEVE ANALYSIS, TEXTURAL CLASS, ORGANIC CONTENT, OR PH RANGE, IT SHALL BE ADJUSTED TO MEET THE SPECIFICATIONS THROUGH THE ADDITION OF SAND, COMPOST, LIMESTONE, OR ALUMINUM SULFATE TO BRING IT WITHIN THE SPECIFIED LIMITS.
4. TOPSOIL SHALL HAVE A PH VALUE BETWEEN 5.5 AND 6.5. TOPSOIL SHALL CONTAIN BETWEEN 4% AND 8% ORGANIC MATTER OF TOTAL DRY WEIGHT AND SHALL CONFORM TO THE FOLLOWING GRADATION AND TEXTURE CLASS ABOVE.

TOPSOIL FOR LAWN, TREES, SHRUBS, & PERENNIALS #

NOT TO SCALE

LANDSCAPE NOTES

1. ALL WORK SHALL BE IN ACCORDANCE WITH THE REQUIREMENTS OF THE TOWN OF STONEHAM.
2. PLANTING PLAN IS DIAGRAMMATIC IN NATURE. FINAL PLACEMENT OF PLANTS TO BE APPROVED BY THE LANDSCAPE ARCHITECT IN THE FIELD.
3. THE CONTRACTOR SHALL BE RESPONSIBLE FOR CONTACTING ALL UTILITY COMPANIES, ANY PERMITTING AGENCIES, AND "DIG–SAFE" (1–888–344–7233) AT LEAST 72 HOURS IN ADVANCE OF ANY WORK THAT WILL REQUIRE EXCAVATION. CONTRACTOR SHALL NOTIFY THE OWNERS REPRESENTATIVE OF NAY CONFLICTS IN WRITING.
4. NO PLANT MATERIAL SHALL BE INSTALLED UNTIL ALL GRADING AND CONSTRUCTION HAS BEEN COMPLETED IN THE IMMEDIATE AREA.
5. ANY TREES NOTED AS "SEAL OR SELECTED SPECIMEN" SHALL BE TAGGED AND SEALED BY THE LANDSCAPE ARCHITECT.
6. ALL TREES SHALL BE BALLED AND BURLAPPED (B&B) UNLESS OTHERWISE NOTED OR APPROVED BY THE OWNER'S REPRESENTATIVE AND LANDSCAPE ARCHITECT.
7. CONTRACTOR SHALL VERIFY QUANTITIES SHOWN ON PLANT LIST. QUANTITIES SHOWN ON PLANS SHALL GOVERN OVER PLANT LIST.
8. ANY PROPOSED PLANT SUBSTITUTIONS MUST BE APPROVED IN WRITING BY OWNER'S REPRESENTATIVE AND LANDSCAPE ARCHITECT.
9. ALL PLANT MATERIALS INSTALLED SHALL MEET THE GUIDELINES ESTABLISHED BY THE AMERICAN STANDARD FOR NURSERY STOCK PUBLISHED BY AMERICANHORT (LATEST EDITION).
10. ALL PLANT MATERIALS SHALL BE GUARANTEED FOR ONE YEAR FOLLOWING DATE OF ACCEPTANCE. ANY PLANT MATERIALS WHICH DIE WITHIN THE ONE YEAR PLANT GUARANTEE PERIOD WILL BE REPLACED BY THE LANDSCAPE CONTRACTOR. OWNERS TO COORDINATE DIRECTLY WITH THE LANDSCAPE CONTRACTOR FOR REPLACEMENT PLANTINGS.
11. ALL DISTURBED AREAS NOT OTHERWISE NOTED SHALL RECEIVE 6" OF SUITABLE LOAM & SEED.
12. LAWNS WITH 3:1 OR GREATER SLOPES SHALL BE PROTECTED WITH AN EROSION CONTROL BLANKET.
13. ANY FALL TRANSPLANTING HAZARD PLANTS SHALL BE DUG IN THE SPRING AND STORED FOR FALL PLANTING.
14. TREES SHALL HAVE A MINIMUM CALIPER AS INDICATED ON THE PLANTING SCHEDULE TAKEN ONE FOOT ABOVE THE ROOT CROWN.
15. ALL PLANT BEDS AND TREE SAUCERS TO RECEIVE 3" OF PINE BARK MULCH. GROUNDCOVER AREAS SHALL RECEIVE 1" OF PINE BARK MULCH.
16. ALL DECIDUOUS TREES ADJACENT TO WALKWAYS AND ROADWAYS SHALL HAVE A BRANCHING PATTERN TO ALLOW FOR A MINIMUM OF 7' OF CLEARANCE BETWEEN THE GROUND AND THE LOWEST BRANCH.
17. ALL TREE STAKES SHALL BE STAINED DARK BROWN.
18. CONTRACTOR RESPONSIBLE FOR WATERING AND RESEEDING OF BARE SPOTS UNTIL A UNIFORM STAND OF VEGETATION IS ESTABLISHED AND ACCEPTED.
19. ALL PARKING ISLANDS PLANTED WITH SHRUBS SHALL HAVE 24" OF TOP SOIL. FINISH GRADE SHALL BE SLOPED TO SIX INCHES (6") ABOVE THE TOP OF CURB.
20. SOIL SAMPLES, TESTS, AND SHOP DRAWINGS SHALL BE PROVIDED TO THE LANDSCAPE ARCHITECT OR THE OWNER FOR APPROVAL PRIOR TO CONSTRUCTION.
21. NO MULCH IS ALLOWED WITHIN 18" OF ALL BUILDINGS PER THE LATEST EXECUTIVE OFFICE OF PUBLIC SAFETY AND SECURITY DEPARTMENT OF FIRE SERVICES REGULATION (527 CMR 17.00).
22. SLOPES AT 2:1 SHOULD HAVE 6" LOAM & SEED. SEEDING OF 2:1 SLOPES SHALL OCCUR IN THE DRY & AFTER SLOPES ARE COMPACTED.
23. ALL LANDSCAPED AREAS WITH SHRUBS, TREES, AND PERENNIALS TO HAVE 2 FEET MINIMUM DEPTH OF TOPSOIL. TWO FEET OF TOPSOIL AROUND TREES AND SHRUBS DOES NOT INCLUDE AMENDED PLANTING SOIL WITHIN TREE / SHRUB PIT FOR FULL DEPTH OF ROOTBALLS. SEE PLANTING DETAILS FOR PLANTING DEPTH AT SHRUBS AND TREES. ALL AREAS OF LOAM AND SEED TO HAVE 6" MINIMUM DEPTH OF TOPSOIL. TOPSOIL TO BE TESTED BY CONTRACTOR, AND APPROVED BY A&M PRIOR TO PURCHASE AND OR PLACEMENT. GENERAL, DEMOLITION, AND LANDSCAPE CONTRACTORS TO COORDINATE PROPER DEPTH OF EXISTING MATERIAL REMOVAL ACROSS SITE SO THAT 2 FEET MINIMUM AND 6" MINIMUM DEPTHS OF PROPOSED TOPSOIL NOTED ABOVE ARE MET. SEE TOPSOIL DETAIL.
24. PRIOR TO LAYING TOPSOIL, ALL SUBSOIL (BELOW PROPOSED TOPSOIL) TO BE TILLED TO A DEPTH OF AT LEAST 18" TO REMOVE CONSTRUCTION COMPACTION AND ALLOW FOR PROPER DRAINAGE OF TOPSOILS.
25. ALL SEEDING TO BE COMPLETED "IN SEASON" BETWEEN APRIL 1 TO JUNE 15 OR AUGUST 15 TO OCTOBER 1, EXCEPT FOR RE–SEEDING OF BARE SPOTS. AT ALL SLOPED AREAS CONTRACTOR TO INSTALL COCONUT FIBER JUTE MESH NETTING ON ALL SLOPES 3:1 AND GREATER, HYDROSEED ALL EXPOSED AREAS, ADD SOIL STABILIZER "FLEXTERRA HP–FGM" AS MANUFACTURED BY "PROFILE" TO HYDROSEED (AT RATE OF 3,000 LBS PER ACRE). CONTRACTOR TO ALSO BE RESPONSIBLE FOR RE–GRADING AND RE–SEEDING ALL DISTURBED, ERODED, OR BARE SPOTS & UNTIL SLOPES ARE FULLY STABLE. CONTRACTOR RESPONSIBLE FOR ALL MAINTENANCE UNTIL FINAL ACCEPTANCE OF LAWN AREAS INCLUDING: WATERING, ADDING FERTILIZERS AND LIME AND MOWING.
26. AFTER SEEDING, ALL AREAS TO BE LIGHTLY MULCHED WITH WEED FREE STRAW & CONTINUALLY WATERED EVERY DAY SO THAT SEED IS KEPT MOIST UNTIL SEED IS ESTABLISHED & APPROVED BY A&M LANDSCAPE ARCHITECT (USE NO HAY).
27. IF THERE IS NO PROPOSED IRRIGATION SYSTEM AFTER PLANTINGS & LAWNS & SEEDED AREAS HAVE BEEN INSTALLED, LANDSCAPE CONTRACTOR RESPONSIBLE TO TEMPORARILY WATER ALL INSTALLED PLANTINGS, SEEDED AREAS, & LAWN AREAS MIN. 4 TIMES A WEEK DURING INITIAL ESTABLISHMENT PERIOD OF 6 MONTHS AFTER ALL LANDSCAPING IS INSTALLED.

LOAM AND SEED NOTES:

CONTRACTOR SHALL SEED ALL DISTURBED AREAS NOT NOTED TO RECEIVE OTHER MATERIALS, AND AT AREAS SHOWN ON THE PLAN PER SPECIFICATIONS BELOW

SCIENTIFIC NAME	COMMON NAME	PROPORTION BY WEIGHT	PERCENT PURITY	PERCENT GERMINATION
FESTUCA RUBRA "RUBRA"	CREEPING RED FESCUE	37%	95%	90%
PAO PRAENTENSIS "BARON"	BARON KENTUCKY BLUEGRASS	40%	85%	90%
LOLIUM PERENNE "PALMER"	PALMER PERENNIAL RYEGRASS	15%	95%	90%
FESTUCA RUBRA COMMUTATA WILMA	WILMA CHEWINGS	8%	95%	80%

1. SEED TO BE SPREAD AT MINIMUM RATE OF 5 LBS. PER 1000 SQ. FT.
2. SEEDING TO BE COMPLETED "IN SEASON" BETWEEN APRIL 1 TO JUNE 15 OR AUGUST 15 TO OCTOBER 1, EXCEPT FOR RESEEDING OF BARE SPOTS. IF UNABLE TO SEED WITHIN THESE TIMEFRAMES, CONTRACTOR TO INSTALL EROSION CONTROL MATS ON ALL SLOPES 3:1 AND OVER, HYDROSEED ALL EXPOSED AREAS, ADD SOIL STABILIZER "FLEXTERRA HP–FGM" AS MANUFACTURED BY "PROFILE" TO HYDROSEED (AT RATE OF 3,000 LBS PER ACRE). CONTRACTOR TO COMPLETE ALL ABOVE "OUT OF SEASON" REQUIREMENTS AND THEN ALSO BE RESPONSIBLE FOR RE–GRADING AND RE–SEEDING ALL DISTURBED, ERODED, OR BARE SPOTS WITHIN NEXT CLOSEST PLANTING SEASON IN FALL OR SPRING.
3. COMMERCIAL FERTILIZER SHALL BE APPLIED AT THE RATE OF 25 POUNDS PER 1000 SQ. FT. OR AS RECOMMENDED BY THE TESTING AGENCY. LIME TO BE SPREAD AT THE RATE OF 100 POUNDS PER 1000 SQ. FT OR AS RECOMMENDED BY THE TESTING AGENCY. COMMERCIAL FERTILIZER SHALL BE A COMPLETE FERTILIZER CONTAINING AT LEAST 50% OF THE NITROGEN OF WHICH IS DERIVED FROM NATURAL ORGANIZE SOURCES OF UREAFORM. IT SHALL CONTAIN THE FOLLOWING PERCENTAGES BY WEIGHT: NITROGEN (N) 10%, PHOSPHORUS (P) 6%, POTASH (K) 4%. LIME SHALL BE AN APPROVED AGRICULTURAL LIMESTONE CONTAINING NOT LESS THAN 85% OF TOTAL CARBONATES. LIMESTONE SHALL BE GROUND TO SUCH FINENESS THAT 50% WILL PASS A 100 MESH SIEVE AND 90% WILL PASS THROUGH A 20 MESH SIEVE.
4. LAWN AREAS TO BE SEEDED BY SOWING EVENLY WITH AN APPROVED MECHANICAL SEEDER AT THE RATE OF TEN POUNDS PER 1000 SQUARE FEET.
5. CONTRACTOR RESPONSIBLE FOR WATERING, MOWING, AND RESEEDING OF LAWN BARE SPOTS UNTIL A UNIFORM, HEALTHY STAND OF GRASS IS ESTABLISHED AND ACCEPTED.

2:1 SLOPED AREAS SEED MIX:

NEW ENGLAND EROSION CONTROL / RESTORATION MIX FOR DRY SITES
(BY NEW ENGLAND WETLAND PLANTS INC. – NEWP.COM)
APPLICATION RATE: 35 LBS/ACRE | 1250 SQ FT/LB

ITEM	BOTANICAL NAME	COMMON NAME
1.	AGROSTIS PERENNANS	UPLAND BENTGRASS
2.	ELYMUS CANADENSIS	CANADA WILD RYE
3.	FESTUCA RUBRA	RED FESCUE
4.	LOLIUM MULTIFLORUM	ANNUAL RYEGRASS
5.	LOLIUM PERENNE	PERENNIAL RYEGRASS
6.	SCHIZACHYRIUM SCOPARIUM	LITTLE BLUESTEM
7.	SORGHASTRUM NUTANS	INDIAN GRASS
8.	PANICUM VIRGATUM	SWITCH GRASS

THE NEW ENGLAND EROSION CONTROL/RESTORATION MIX FOR DRY SITES PROVIDES AN APPROPRIATE SELECTION OF NATIVE AND NATURALIZED GRASSES TO ENSURE THAT DRY AND RECENTLY DISTURBED SITES WILL BE QUICKLY RE–VEGETATED AND THE SOIL SURFACE STABILIZED. IT IS AN APPROPRIATE SEED MIX FOR ROAD CUTS, PIPELINES, STEEPER SLOPES, AND AREAS REQUIRING QUICK COVER DURING THE ECOLOGICAL RESTORATION PROCESS. THE MIX MAY BE APPLIED BY HYDRO–SEEDING, BY MECHANICAL SPREADER, OR ON SMALL SITES IT CAN BE SPREAD BY HAND. LIGHTLY RAKE, OR ROLL TO ENSURE PROPER SOIL SEED CONTACT. BEST RESULTS ARE OBTAINED WITH A SPRING OR LATE SUMMER SEEDING. LATE SPRING THROUGH MID–SUMMER SEEDING WILL BENEFIT FROM A LIGHT MULCHING OF WEED–FREE STRAW TO CONSERVE MOISTURE. IF CONDITIONS ARE DRIER THAN USUAL, WATERING WILL BE REQUIRED.
FERTILIZATION IS NOT REQUIRED UNLESS THE SOILS ARE PARTICULARLY INFERTILE. PREPARATION OF A CLEAN WEED FREE SEED BED IS NECESSARY FOR OPTIMAL RESULTS.

PLANTING SCHEDULE -TREES, SHRUBS, GROUNDCOVERS & PERENNIALS

	KEY	QTY	BOTANICAL NAME	COMMON NAME	SIZE	SPACING	COMMENTS
DECIDUOUS/SHADE AND FLOWERING TREES							
*	AR	18	ACER RUBRUM	RED MAPLE	3.5" CAL.	AS SHOWN	B&B, SPECIMEN
* ~	AF	13	ACER FREEMANII 'ARMSTRONG'	ARMSTRONG MAPLE	3.5" CAL.	AS SHOWN	B&B
* ~	AB	6	AMELANCHIER X GRANDIFLORA 'AUTUMN BRILLIANCE'	AUTUMN BRILLIANCE SERVICEBERRY	10–12' HT.	AS SHOWN	B&B, MULTISTEM
* ~	BN	10	BETULA NIGRA 'DURA HEAT'	DURA HEAT RIVER BIRCH	12–14' HT.	AS SHOWN	B&B, MULTISTEM
* ~	CC	2	CERCIS CANADENSIS	EASTERN REDBUD	3.5" CAL.	AS SHOWN	B&B
* ~	TA	19	TILIA AMERICANA	GREENSPIRE LINDEN	3.5" CAL.	AS SHOWN	B&B
EVERGREEN TREES							
* ~	AC	5	ABIES CONCOLOR	WHITE FIR	10–12' HT.	AS SHOWN	B&B
*	FF	11	ABIES FRASERI	FRASER FIR	10–12' HT.	AS SHOWN	B&B
SHRUBS							
* ~	CH	TBD	CEANOTHUS HERBACEUS	NEW JERSEY TEA	#2	AS SHOWN	ROW
*	IG	TBD	ILEX GLABRA 'SHAMROCK'	SHAMROCK INKBERRY	2–2.5'	AS SHOWN	B&B
*	RC	TBD	RHODODENDRON CAROLINIANUM	CAROLINA RHODODENDRON	#5	AS SHOWN	POT
PERENNIALS/GRASSES							
* ~	BF	TBD	AGASTACHE 'BLUE FORTUNE'	HUMMINGBIRD MINT	#2	24" O.C.	STAGGERED
*	PD	TBD	ASTER NOVAE ANGLIAE 'PURPLE DOME'	NEW ENGLAND ASTER	#1	24" O.C.	STAGGERED
* ~	EP	TBD	ECHINACEA PURPUREA 'POW WOW WILDBERRY'	PURPLE CONEFLOWER	#2	18" O.C.	STAGGERED
* ~	ML	TBD	MELAMPODIUM LEUCANTHUM	BLACKFOOT DAISY	#2	24" O.C.	STAGGERED
* ~	PV	TBD	PANICUM VIRGATUM	SWITCHGRASS	#3	36" O.C.	STAGGERED
* ~	RF	TBD	RUDBECKIA FULGIDA	BLACK EYED SUSAN	#1	24" O.C.	STAGGERED
* ~	SS	TBD	SCHIZACHYRIUM SCOPARIUM	LITTLE BLUE STEM	#2	24" O.C.	STAGGERED
*	DENOTES NATIVE SPECIES OR NATIVE CULTIVAR						
~	DENOTES DROUGHT TOLERANCE						

MASSACHUSETTS Stephen B. Tylus NO. 1526 REGISTERED LANDSCAPE ARCHITECT

04.30.2024

PROFESSIONAL LANDSCAPE ARCHITECT FOR ALLEN & MAJOR ASSOCIATES, INC.

REV	DATE	DESCRIPTION
1	2024-04-30	REVISED PER PEER REVIEW COMMENTS

APPLICANT\OWNER:
FELLSWAY DEVELOPMENT LLC
c/o THE GUTIERREZ CO.
200 SUMMIT DRIVE, SUITE 400
BURLINGTON, MA 01803

PROJECT:
THE RESIDENCES AT SPOT POND
MULTI-FAMILY HOUSING
5 WOODLAND ROAD
STONEHAM, MA 02180

PROJECT NO.	1145-01T	DATE:	2023-11-16
SCALE:	AS SHOWN	DWG. NAME:	L-1145-01T
DESIGNED BY:	JBT	CHECKED BY:	CMQ

PREPARED BY:
ALLEN & MAJOR ASSOCIATES, INC.
civil engineering ◆ land surveying
environmental consulting ◆ landscape architecture
www.allenmajor.com
100 COMMERCE WAY, SUITE 5
WOBURN MA 01801
TEL: (781) 935-6889
FAX: (781) 935-2896
WOBURN, MA ◆ LAKEVILLE, MA ◆ MANCHESTER, NH

THIS DRAWING HAS BEEN PREPARED IN DIGITAL FORMAT. CLIENT/CLIENT'S REPRESENTATIVE OR CONSULTANTS MAY BE PROVIDED COPIES OF DRAWINGS AND SPECIFICATIONS FOR HIS/HER INFORMATION AND/OR SPECIFIC USE ON THIS PROJECT. DUE TO THE POTENTIAL THAT THE PROVIDED INFORMATION MAY BE MODIFIED UNINTENTIONALLY OR OTHERWISE, ALLEN & MAJOR ASSOCIATES, INC. MAY REMOVE ALL INDICATION OF THE DOCUMENT'S AUTHORSHIP ON THE DIGITAL MEDIA. PRINTED REPRESENTATIONS OR PORTABLE DOCUMENT FORMAT OF THE DRAWINGS AND SPECIFICATIONS ISSUED SHALL BE THE ONLY RECORD COPIES OF ALLEN & MAJOR ASSOCIATES, INC.'S WORK PRODUCT.

DRAWING TITLE: LANDSCAPE NOTES & DETAILS

SHEET No. L-501

Copyright©2024 Allen & Major Associates, Inc.
All Rights Reserved

ISSUED FOR PERMITTING - NOT FOR CONSTRUCTION

N:\PROJECTS\1145-01T\CAD\L-1145-01T - LANDSCAPE.DWG

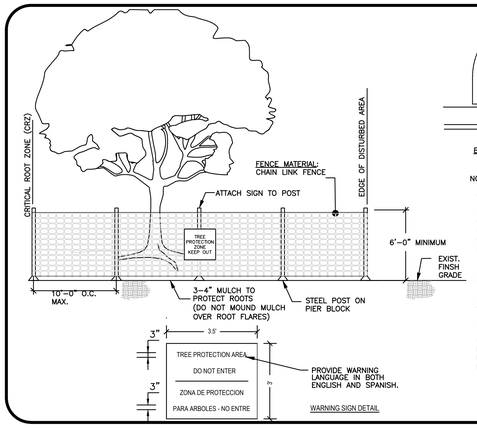

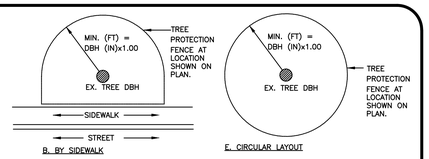

NOTES:

1. FENCE SHALL BE INSTALLED PRIOR TO THE START OF ANY DEMOLITION, CLEARING, GRADING OR ANY OTHER DEMOLITION OR CONSTRUCTION ACTIVITY.

2. PLACE TREE PROTECTION FENCING AT THE OUTER LIMITS OF THE CRITICAL ROOT ZONE (CRZ). THE CRZ IS ESTABLISHED AT A DISTANCE OF 1.0' IN RADIUS MEASURED PER 1" OF TREE TRUNK DIAMETER AT BREAST HEIGHT (DBH – MEASURED AT 4.5' ABOVE EXISTING GRADE). INSTALL THE TREE PROTECTION FENCING RADIALLY ALONG THE CRZ AS SHOWN IN THE ELEVATION AND PLAN VIEW DRAWING. FOR EXAMPLE: A 15" DBH TREE WOULD HAVE A 15.0' TREE PROTECTION FENCE RADIUS INSTALLED AROUND THE TREE

3. CONSTRUCTION FENCE TO BE 6' HIGH MIN. CHAIN LINK ON PIER BLOCK ONLY. AVOID STAKES TO MINIMIZE ROOT DAMAGE.

4. IF GROUPS OF TREES ARE TO BE PROTECTED, EXTEND FENCE AROUND PERIMETER TO CONFORM TO MINIMUM DIMENSIONS FOR TREE TRUNKS AND DRIPLINE.

5. SEE SITE PREPARTION PLAN FOR TREES TO SAVE & PROTECT.

6. SPACE TREE PROTECTION ZONE SIGNS A MINIMUM OF ONE EVERY TREE. THE SIZE OF EACH SIGN MUST BE A MINIMUM OF 3.5' X 3' AND BE VISIBLE FROM BOTH SIDES OF THE FENCE. THE SIGN MUST BE WEATHER-PROOF AND CONTAIN THE FOLLOWING LANGUAGE IN BOTH ENGLISH & SPANISH: "TREE PROTECTION AREA, DO NOT ENTER".

TEMP. CONST. FENCE / TREE PROTECTION
NOT TO SCALE
1

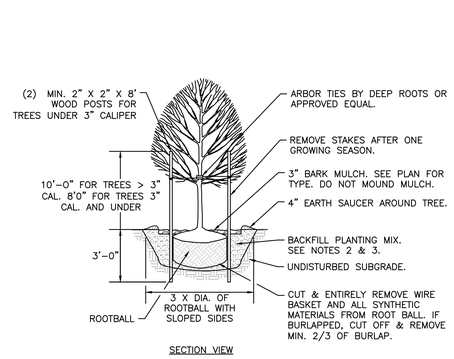

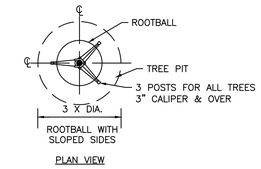

NOTES:

1. ALL TREES SHALL HAVE THE SAME RELATIONSHIP TO FINISH GRADE AFTER PLANTING AS THEY HAD AT THE ORIGINAL NURSERY SETTING. ROOT FLARE SHALL BE 2" ABOVE FINISH GRADE. REMOVE SOIL FROM TRUNK FLARE OF TREE TO DETERMINE ACTUAL ROOTBALL AREA.

2. BACKFILL WITH PLANTING MIX. PLANT MIX TO BE: 50% NATIVE TOPSOIL, 20% BLENDED AND GROUND COMPOST (LEAVES & ORGANIC MATERIAL, NO ASH OR TOXIC MATERIALS) 20% PEAT MOSS, 10% SAND.

3. ADD MYCORRHIZA SOIL ADDITIVES AND SLOW RELEASE FERTILIZER WHEN PLANT HOLES ARE 50% FILLED AND WATER THOROUGHLY AT COMPLETION.

DECIDUOUS TREE
NOT TO SCALE
2

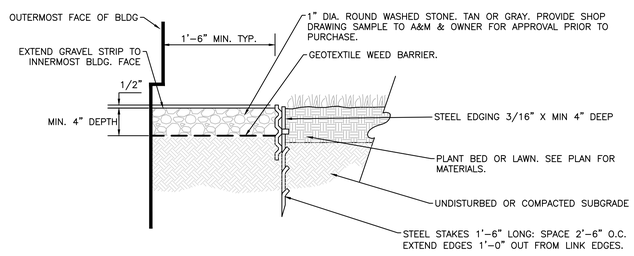

NOTES:
1. STONE STRIP IS TO BE INSTALLED CONTINUOUS ADJACENT TO THE ENTIRE FACE OF BUILDINGS EXCEPT WHERE OTHER HARD SURFACING MATERIALS ARE SPECIFIED OR IF SHOWN OTHERWISE ON PLAN.
2. STONE STRIP TO BE INSTALLED UNDER ALL BUILDING OVERHANGS.
3. COORDINATE INSTALLATION OF STONE STRIP WITH INSTALLATION OF FOUNDATION DRAIN & TO BE LOCATED BEYOND ROOF OVERHANG.

STONE DRIP STRIP ALONG BUILDING (FOR BUILDING WITHOUT GUTTERS)
NOT TO SCALE
3

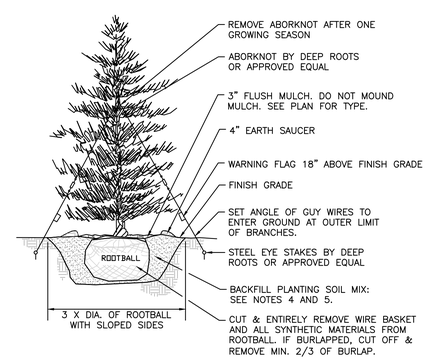

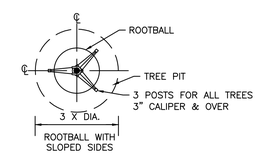

NOTES

1. TREES SHALL BEAR SAME RELATIONSHIP TO FINISH GRADE AS IT BORE TO NURSERY OR FIELD GRADE. ROOT FLARE SHALL BE 2" ABOVE FINISH GRADE. REMOVE SOIL FROM TRUNK FLARE OF TREE TO DETERMINE ACTUAL TOP OF ROOTBALL AREA.

2. ATTACH GUY WIRES AT 2/3 HEIGHT OF TREE.

3. BACKFILL WITH PLANTING MIX. PLANT MIX TO BE: 50% NATIVE TOPSOIL, 20% BLENDED AND GROUND COMPOST (LEAVES & ORGANIC MATERIAL, NO ASH OR TOXIC MATERIALS) 20% PEAT MOSS, 10% SAND.

4. ADD MYCORRHIZA SOIL ADDITIVES AND SLOW RELEASE FERTILIZER WHEN PLANT HOLES ARE 50% FILLED AND WATER THOROUGHLY AT COMPLETION.

EVERGREEN TREE
NOT TO SCALE
4

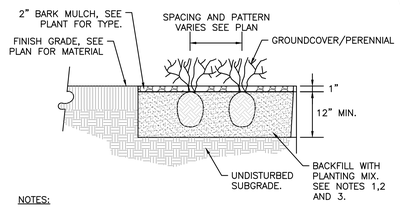

NOTES:

1. ALL GROUNDCOVER/PERENNIALS SHALL HAVE THE SAME RELATIONSHIP TO FINISH GRADE AFTER PLANTING AS THEY HAD AT THE ORIGINAL NURSERY SETTING. ROOT FLARE SHALL BE 2" ABOVE FINISH GRADE. REMOVE SOIL FROM STEM OF GROUND COVER/ PERENNIAL TO DETERMINE ACTUAL ROOTBALL AREA.

2. BACKFILL WITH PLANTING MIX. PLANT MIX TO BE: 50% NATIVE TOPSOIL, 20% BLENDED AND GROUND COMPOST (LEAVES & ORGANIC MATERIAL, NO ASH OR TOXIC MATERIALS) 20% PEAT MOSS, 10% SAND.

3. ADD MYCORRHIZA SOIL ADDITIVES AND SLOW RELEASE FERTILIZER WHEN PLANT HOLES ARE 50% FILLED AND WATER THOROUGHLY AT COMPLETION.

GROUNDCOVER/PERENNIAL PLANTING
NOT TO SCALE
5

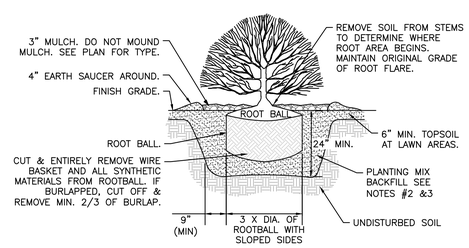

NOTES:

1. ALL SHRUBS ROOT FLARE SHALL HAVE THE SAME RELATIONSHIP TO FINISH GRADE AFTER PLANTING AS THEY HAD AT THE ORIGINAL NURSERY SETTING.

2. BACKFILL WITH PLANTING MIX. PLANT MIX TO BE: 50% NATIVE TOPSOIL, 20% COMPOST (LEAVES & ORGANIC MATERIAL, NO ASH) 20% PEAT MOSS, 10% SAND.

3. ADD MYCORRHIZA SOIL ADDITIVES AND SLOW RELEASE FERTILIZER WHEN PLANT HOLES ARE 50% FILLED. WATER THOROUGHLY AT COMPLETION.

4. SHRUB BEDS TO HAVE 24" MIN. OF CONTINUOUS PLANTING SOIL.

SHRUB
NOT TO SCALE
6

04.30.2024

PROFESSIONAL LANDSCAPE ARCHITECT FOR ALLEN & MAJOR ASSOCIATES, INC.

REV	DATE	DESCRIPTION
1	2024-04-30	REVISED PER PEER REVIEW COMMENTS

APPLICANT\OWNER:
FELLSWAY DEVELOPMENT LLC
c/o THE GUTIERREZ CO.
200 SUMMIT DRIVE, SUITE 400
BURLINGTON, MA 01803

PROJECT:
THE RESIDENCES AT SPOT POND
MULTI-FAMILY HOUSING
5 WOODLAND ROAD
STONEHAM, MA 02180

PROJECT NO.	1145-01T	DATE:	2023-11-16
SCALE:	AS SHOWN	DWG. NAME:	L-1145-01T
DESIGNED BY:	JBT	CHECKED BY:	CMQ

PREPARED BY:
ALLEN & MAJOR ASSOCIATES, INC.
civil engineering ◆ land surveying
environmental consulting ◆ landscape architecture
www.allenmajor.com
100 COMMERCE WAY, SUITE 5
WOBURN MA 01801
TEL: (781) 935-6889
FAX: (781) 935-2896
WOBURN, MA ◆ LAKEVILLE, MA ◆ MANCHESTER, NH

THIS DRAWING HAS BEEN PREPARED IN DIGITAL FORMAT. CLIENT/CLIENT'S REPRESENTATIVE OR CONSULTANTS MAY BE PROVIDED COPIES OF DRAWINGS AND SPECIFICATIONS FOR HIS/HER INFORMATION AND/OR SPECIFIC USE ON THIS PROJECT. DUE TO THE POTENTIAL THAT THE PROVIDED INFORMATION MAY BE MODIFIED UNINTENTIONALLY OR OTHERWISE, ALLEN & MAJOR ASSOCIATES, INC. MAY REMOVE ALL INDICATION OF THE DOCUMENT'S AUTHORSHIP ON THE DIGITAL MEDIA. PRINTED REPRESENTATIONS OR PORTABLE DOCUMENT FORMAT OF THE DRAWINGS AND SPECIFICATIONS ISSUED SHALL BE THE ONLY RECORD COPIES OF ALLEN & MAJOR ASSOCIATES, INC.'S WORK PRODUCT.

DRAWING TITLE: LANDSCAPE NOTES & DETAILS

SHEET No. L-502

Copyright©2024 Allen & Major Associates, Inc.
All Rights Reserved

ISSUED FOR PERMITTING - NOT FOR CONSTRUCTION

K:\PROJECTS\1145-01T\CIVIL\DRAWINGS\CURRENT\L-1145-01T - LANDSCAPE.DWG